DYNAMETERS™

# DMHFP
# Transit Time Heat Meter
# Portable

Operation &maintenance

Manual

REV 12/2011

# CONTENTS

# PART-1 INTRODUCTION

## 1.1 GENERAL

DYNAMETERS SERIES DMHFP Heat Meters employ advanced Transit-Time measuring technology, providing accurate and reliable flow rate and total flow display, SERIES DMHFP systems utilize dual time-base time expansion algorithm, advanced DSP and digital cross-correlation. The SERIES DMHFP utilizes a non-invasive transducer which is hand-held or strapped to the outside of a pipe, which will provide benefits of non-fouling operation and ease of installation. Although designed primarily for clean liquids, the heat meter can reliably measure liquids containing moderate amounts of suspended solids or aeration. SERIES DMHFP is designed for long or short-term flow measurement surveys on full-pipe liquid systems and is ideal for verifying calibration of permanently mounted heat meters of all types.

## 1.2 PRINCIPLE OF MEASUREMENT

The DMHFP Heat Meter is designed to measure the fluid velocity and temperature of liquid within a closed pipe. The transducers are a non-invasive, clamp-on type, which will provide benefits of non-fouling operation and easy installation. The temperature sensors are Pt1000 and have high accuracy.

When measuring velocity, the DMHF transit time heat meter utilizes two transducers that function as both ultrasonic transmitters and receivers. The transducers are clamped on the outside of a closed pipe at a specific distance from each other. The transducers can be mounted in V-method where the sound transverses the pipe twice, or W-method where the sound transverses the pipe four times, or in Z-method where the transducers are mounted on opposite sides of the pipe and the sound crosses the pipe once. This selection of the mounting method depends on pipe and liquid characteristics. The heat meter operates by alternately transmitting and receiving a frequency modulated burst of sound energy between the two transducers and measuring the transit time that it takes for sound to travel between the two transducers. The difference between the transit-time is directly and exactly related to the velocity of the Liquid in the pipe, as shown in Figure 1.

$$V = K * D * dt$$

Where: **V:** Liquid velocity
K: Constant
D: Distance between the transducers
dt: difference in time of flight

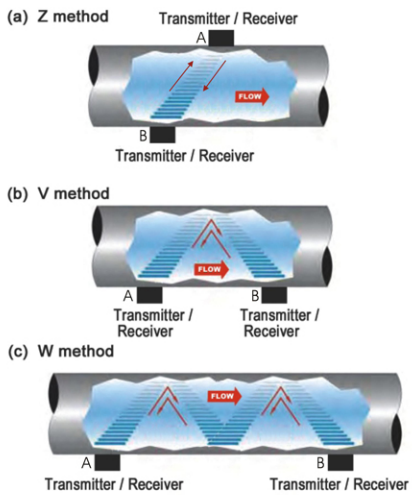


Figure 1

When measuring temperature, the two temperature sensors of Pt1000 clamp on the pipeline or insert in the pipe, and get two temperature values.
The value of energy is indicated / measured based on the following mathematical model:

$$Q = \int_{V1}^{V2} k(t1 - t2)dV$$

Where: Q – Quantity of heat given up
V – Volume of liquid passed
k – Heat coefficient, is a function of the properties of the heat-conveying liquid at the relevant temperatures and pressure
t1 – Inlet temperature of liquid
t2 – Outlet temperature of liquid

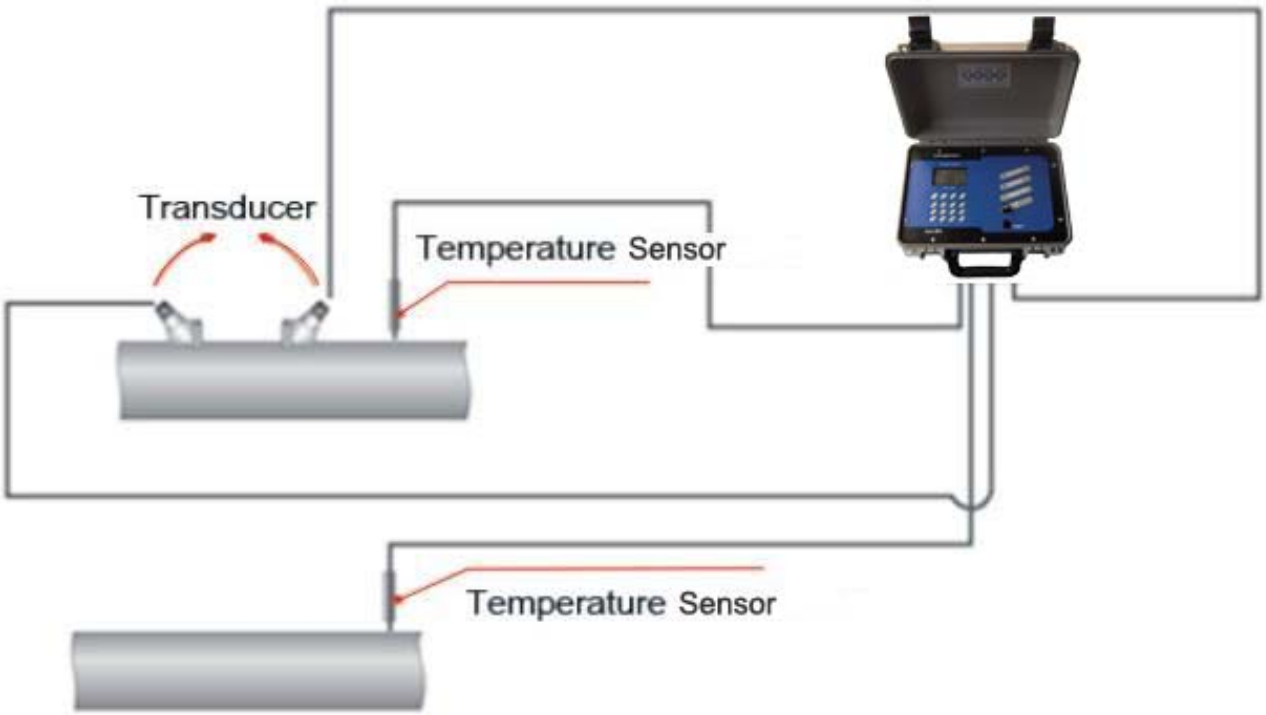

## 1.3 APPLICATION

1. Long or short-term flow measurement surveys on full-pipe liquid systems
2. Verifying calibration of permanently mounted heat meters of all types
3. Inspect the flow leakage
4. Milk, yoghourt milk
5. Gasoline kerosene diesel oil
6. Power plant
7. Metallurgy, Laboratory
8. Energy-conservation, economize on water
9. Food and medicine
10 Heat flow measures, Heat flow balance

## 1.4 FEATURES

- Using advanced DSP technology and the Multiyear transducer technology.
- Non-invasive system allows solids to pass through the pipe within effect on meter. Y-strainers or filtering devices are not needed.
- Digital cross-correlation technology.
- Available including event data logger can search the event of totalized flow.
- Since the sensors do not contact the liquid, fouling and maintenance are eliminated.
- Provides easy and low cost installation by clamping on the outside of existing piping systems.
- Do not hinder the fluid from flowing, produce the pressure that can be neglected to lose.
- A pair of sensors can satisfy different materials, the measurement of the craft pipeline of different pipe diameters.
- Temperature transducers have two types: Clamp-on and Insertion temperature sensors.

## 1.5 SPECIFICATIONS

**Transmitter**

| Description | Specifications |
|---|---|
| Principle of Measurement | Principle of Transit Time, DSP technology and MultiPulse Transducer Technology |
| Power Requirements | Internal 7.2AH Charging battery ,<br>Provides 48 hrs. Of continuous operation @ 20 °C.<br>Charging power: 220VAC/110VAC±15% |
| Velocity | 0 ~ ±12m/s |
| Display | 4line×16 English Letters LCD back lit 4×4 Keyboard |
| Units<br>Rate<br>Totalized | User Configured (English and Metric)<br>Rate and Velocity Display<br>Forward total Reverse total Net Total(difference between forward and reverse flow) |
| Output | Standard: 4-20mA, OCT Freq output for flow rate,<br>Options: Relay output for total flow and alarm, the relays are rated for 150 VDC maximum and have a current rating of 0.18 A resistive load. RS232 output, SD card Data Logger (up to 8 GB based SD card capacity). |
| Ambient Conditions | -40~55℃, 0~95% relative humidity |
| Enclosure | NEMA 4X [IP65] Polycarbonate SS Brass and plated steel |
| Accuracy Flow Rate | 1.0% of reading (at rates >0.5 m/s)<br>±0.005 m/s of reading (at rates<0.5 m/s) |
| Repeatability | ±0.2% of reading |
| Responding Time | 0~999ms customer configuration |
| Security | Keypad lockout access code enable |

**Transducer**

| Description | Specifications |
|---|---|
| Liquid Type Supported | Virtually most any liquid containing less than 2% total suspended solids (TSS) or aeration. |
| Liquid temperature | Std. Transducer: -40 to 240F [-40 to 121℃]<br>High Temp. Transducer: -40 to 480F [-40 to 250℃] |
| cable | Flexible cable, 4 meters or 8 meters, add length please consult factory. |
| Pipe size | Std M type transducer: 40-1000mm I.D., Options: L transducer: 40-180inches(1000-4500mm) , S transducer: 15-50mm |
| Pipe material | All kind of steel and cast iron PVC |
| **Temperature Sensor** | Pt1000, 0℃ to 200℃<br>Clamp-on and Insertion type<br>Accuracy: ±0.1% |

## 1.6 PARTS IDENTIFICATION





**K mode transducers:**

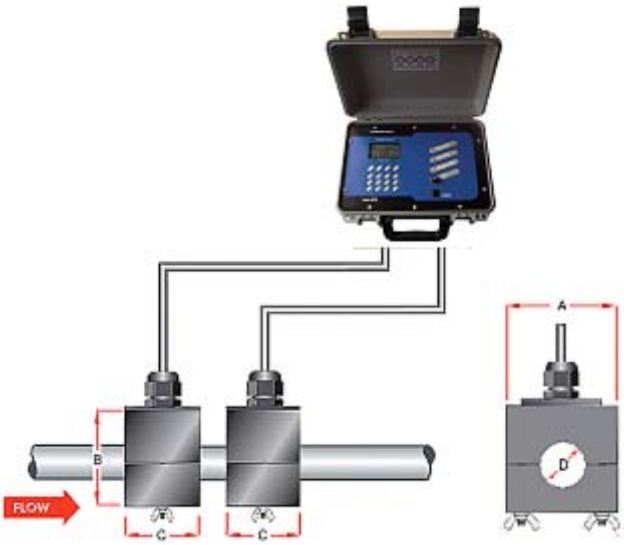


| Size | Material | A | B | C | D |
|---|---|---|---|---|---|
| K1:<br>1/2", 3/4", 1" | PTFE | 55 | 39 | 42 | 34 |
| K2:<br>3/4", 1", 1-1/4" | PTFE | 64 | 46 | 42 | 43 |
| K3:<br>1-1/4", 1-3/4", 2" | PTFE | 80 | 46 | 42 | 61 |

# PART-2 TRANSDUCER INSTALLATION

## 2.1 TRANSDUCER POSITIONING

- Selection of the optimum location on a piping system, usually upstream dimension than 10D, Downstream dimension than 5D.where D is pipe diameter.
- If upstream has same pump then the dimension than 50D where the export of the pump.
- Open from 60% one degree of valves lighter than 30D
- Should avoid the welding seam to install. Full of bumps and holes. The heat preservation must be stripped. The pipeline material must be even.
- You had better be far away from electromagnetic interfering and pipeline vibration, keep away from frequency conversion and ultrasonic radiant.

The optimum straight pipe diameter recommendations apply to pipes in both horizontal and vertical or incline installation

| **Piping configuration And transducer position** | **Upstream Dimension** | **Downstream Dimension** |
|---|---|---|
| | **Pipe Diameters（*）** | **Pipe Diameters（**）** |
|  | 10 | 5 |
| 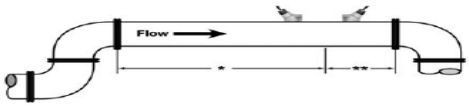 | 14 | 5 |
|  | 24 | 5 |
|  | 30 | 5 |
|  | 10 | 5 |
| 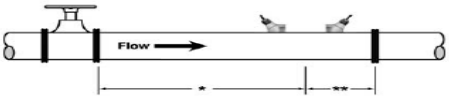 | 24 | 10 |

## 2.2 PIPE PREPARATION

The piping surface ,where the transducer are to be mounted ,needs to be cleaned of all rust , scale and moisture ,Rust and paint , plastic pipes typically do not require surface preparation other than soap and water cleaning.
The centre line of the transducer is designed parallel on the centre line of installing the pipeline. The transducers mustn't be installed in the elbow , return bend or reduced expenditure on one and equipment instrument Must try hard , make the sensor parallel in the axis of the pipeline.
Restrict by space of installation site but level can't be symmetrical to install the sensor, but on terms that there is not bubble in the top while guaranteeing to manage, vertical or have installation of the inclination. Bury situation of ground by part as to pipeline, installation method please consult manufacturer's technical staff.

## 2.3 CALCULATION TRANSDUCER SPACING

This value represents the one –dimensional linear Measurement between the transducers (the upstream/downstream measurement that runs parallel to the pipe) This value is in inches if ENGLISH was selected as UNITS; in millimeters if METRIC was selected as UNITS; if the transducers are being mounted using the display value of the MENU 25 of DMHFP.

## 2.4 TRANSDUCER INSTALLATION METHOD

Transducer mounting configuration Use the following guide to determine the optimum mounting method for a particular installation (V-Mount Z-Mount and W-Mount)

The transducer spacing is from end of one sensor to another sensor.

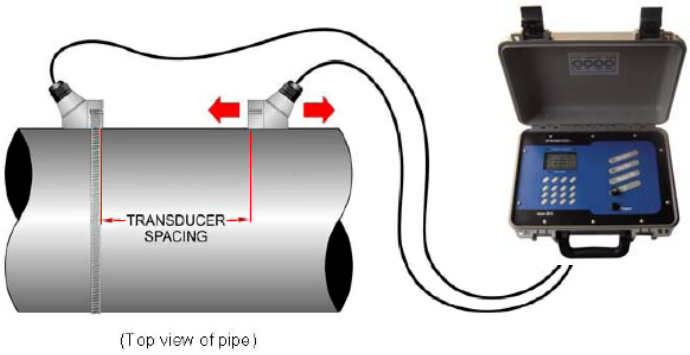


**Figure 2.3**
**Transducer Position**

### 1. V-Mount

V-Mount is the STD installation method, it is convenient and accurate, Reflective type (transducers mouthed on one side of the pipe) of installation used primarily on pipe size in the

(50mm~400mm) internal diameter range attention transducer designed parallel on the centre line of installing the pipeline.

The spacing value shown on menu window M25 refers to the distance of inner spacing between the two transducers. The actual transducers spacing should be as close as possible to the spacing value. The transducer spacing is from the end of one transducer to another sensor.

V-Mount Configuration

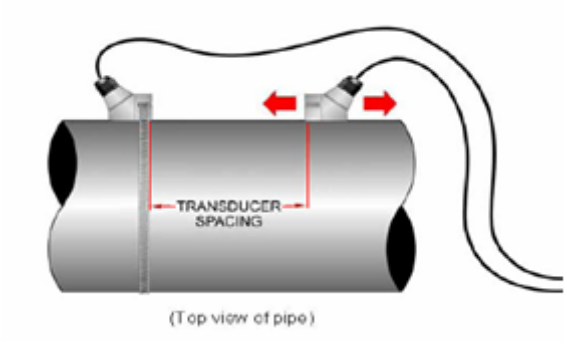


**Normal transducer spacing**

The transducer mounting spacing is very important for Transit-time meters, and users need mount transducers exactly according to the spacing distance value M25 displays after users input proper parameter settings. M91 is only for reference, and just keep it within 97--103% value range.

As the above figure shows, the normal transducer spacing refers to the distance between the ends of the two transducers (as the two red lines indicate). And this spacing should be exactly according to the value M25 tells you. Note that this method suits for normal Small, Std. M and Large transducer.

For Magnetic transducers, the definition of transducer spacing is the distance between the two scale lines, just as showed bellow:

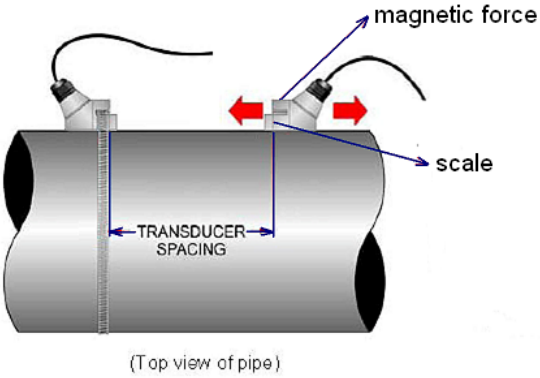


**Magnetic Transducer Spacing**

The value displayed in M25 for magnetic transducer spacing refers to the distance showed in the above figure. (Note: The displayed value in M25 is larger than the distance between the ends of the two magnetic transducers.) Users should mount the magnetic transducers with the above showed spacing exactly according to the M25 value.

**2. Z-mount.**

Z-MOUNT is the Direct type (transducer mounted on opposite sides of the pipe)of installation used primarily on pipe size in the 100mm~2500mm internal diameter range.

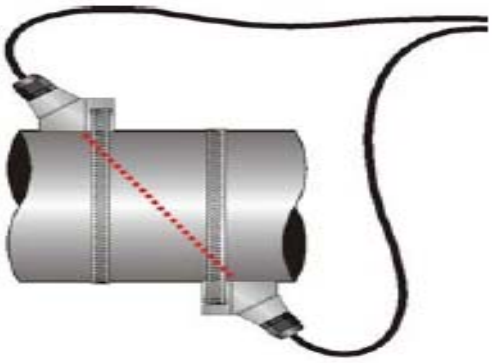

Z-Mount Configuration

**3. W-MOUNT**

Reflective type (transducers mounted on one side of plastic pipe size in the 25mm~65mm internal diameter range.

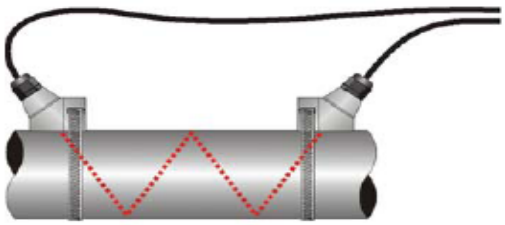

W-Mount Configuration

## 2.5 TRANSDUCER MOUNTING INSPECTION AND COUPLANT APPLICATION

### 2.5.1 Transducer Mounting Inspection

It is very important to use menu operations for TRANSDUCER MOUNTING INSPECTION and Estimation, Refer to 5.16, Use menu windows for Transducer Mounting Inspection.

### 2.5.2 Couplant Application

A, Spread an even layer of coupling compound, approximately 3mm thick, to the prepared transducer mounting areas of the pipe. Utilize DOW111 for temporary mounting, place each transducer under the strap with the flat face positioned towards the pipe, Transducer in charge of not there can't be bubble and grit between the pipes.

B, Transducers for High Temperature

Mounting of high temperature transducers is similar to DMHFP standard transducers; High temperature installations require acoustic couplant Dow Corning 112 that is rated not to flow at the temperature that will be present on the pipe surface.

# PART-3 START OPERATING INSTRUCTIONS

## 3.1 POWER ON

Press the POWER key to switch on the instrument and press the POWER to turn off the power.

Once the heat meter is switched on, it will run a self diagnostic program, checking first the hardware and then the software integrity. If there is any abnormality, corresponding error messages will display.

Generally, there should be no display of error messages, and the heat meter will go to the most commonly used Menu Window Number 01 (short for M01) to display the Velocity, Flow Rate, Positive Totalizer, Signal Strength and Signal Quality, meter run status based on the pipe parameters configured last time by the user or by the initial program.

The flow measurement program always operates in the background of the user interface. This means the flow measurement will keep on running regardless of any user menu window browsing or viewing. Only when the user enters new pipe parameters will the heat meter change measurement to the new parameter changes.

When new pipe parameters have been entered or when the power has been just switched on, the heat meter will enter an adjusting mode to make the signals magnified with proper amplification. By this step, the heat meter is going to find the best threshold of receiving signal. The user will see the progress by the number 1, 2, or 3, which are indicated on the right lower corner of the LCD display.

When the transducers have been adjusted on the pipe by the user, the heat meter will re-adjust the signal automatically.

Any user-entered configuration value will be retained into the NVRAM of the heat meter, until it is modified by the user.

## 3.2 KEYPAD

The DMHF contains a 16-key tactile keypad, allows the user to view and change configuration parameters as shown below.

Follow these guidelines when using DMHF keypad:

0~9 and . to input numbers and decimal.

◄ to backspace or delete characters to the left.

The ARROW keys ∧ and ∨ To return to the last menu or to open the next menu, are used to scroll through menu configuration parameters; Also acts as "+" and "-" functions when entering numbers.

MENU To select a menu. Press this key first, input two menu numbers and then enter the selected menu. For instance, to input a pipe Outside diameter, press MENU 1 2 keys, where "12" is the window Address to display the parameter pipe wall thickness.

### 3.2.1 KEYPAD OPERATION

With all of the parameters entered, the instrument setup and measurement displays are subdivided or consolidated into more than 100 independent windows. The user can view the window menu, input parameters, modify settings or display measurement results. These windows are arranged by 2-digit serial numbers (including ∧ sign) from 00~99, then to ∧ 0, ∧ 8, etc.. Every window serial number, or so-called window Address code, has a defined meaning. For instance, Window No.11 indicates the parameter input for pipe outside diameter, while Window No.25 indicates the mounting distance between the transducers, etc. (Refer to Part 4 – Windows Display Explanations).

The keypad shortcut to visit a specific window is to press the MENU key at any time, then input the 2-digit window Address code. For instance, to input or check the pipe outside diameter, just press the MENU 、1 、1 keys for window Address code 11.

Another method to visit a particular window is to press ∧ , ∨ and ENTER keys to scroll the menu. For instance, if the current window Address code is 66, press ∧ key to enter Window No.65, press the ∧ again to enter Window No.64; then, press the ∨ key to back Window No.65, and press the ∨ key again to enter Window No.66.

Example 1. To enter a pipe outside diameter of 218.6, the procedure is as follows:

Press MENU 1 1 keys to enter Window No.11 (the numerical value displayed currently is a previous value). Now press ENTER key. The symbol > and the flashing cursor are displayed at the left end of the second line on the Screen. The new value can be entered by press 2 1 8 . 6 ENTER .

```
M11
Outer Diameter
        108 mm
```

```
M11
Outer Diameter
        108 mm
> 218.6
```

Example 2. If the pipe material is "Stainless Steel", press keys MENU 1 4 to enter Window No.14 first. Then press ENTER key to modify the options. Now, select the "1. Stainless Steel " option by pressing ∧ and ∨ keys, and then press ENTER key to confirm the selection.

It is possible to press the key 1 to change the selection and wait until "1. Stainless Steel" is displayed on the second line of the screen. Then press the ENTER key to confirm.
Generally, press ENTER key first if operator wants to enter "modify" condition. If the "modify" is still not possible even after pressing the ENTER key, it means that system is locked by a password. To "Unlock" it, select "Unlock" in Window No. 47 and enter the original password. The keypad will not respond if the keypad is locked. It only can be unlocked by the entering original password. Select keypad lock functions in Window No. 48. Please consult factory for password if necessary.

3.3 MENU WINDOWS

The user interface of this heat meter comprises about 100 different menu windows that are numbered by M00, M01, M02 … M94 etc.

**There are 2 methods to enter certain menu window:**

(1) Direct going/entering. The user can press the MENU key followed by two-digit number keys. For example, the menu window M11 is for the entering of pipe outer diameter. The display will go to the M11 menu window after the user presses MENU 1 1.

(2) Pressing and ▼keys. Each time of the ▲key pressing will proceed to the lower-numbered menu window. For example, if the current window is on M12, the display will go to the number M11 window after pressing the ▲key.

**There are three different types of menu windows:**

(1) Menu windows for number entering, like M11 for the entering of pipe outer diameter.

(2) Menu windows for option selection/selecting options, like M14 for the selection of pipe materials.

(3) Displaying windows only, like M00 to display Velocity, Flow Rate etc.

For number entering windows, the user can directly press the starting digit key when the user is going to modify the value. For example, when the current window is on M11, and the user is going to enter 154.6 as the pipe outer diameter, the user can get the numbers entered by pressing the following serial keys: 1 5 4 . 6 ENTER.

For the option selection windows, the user should first press the ENTER key to a selection modification mode and then select the relevant options by pressing the ▲and ▼keys or the digit keys to select the option with a number antecedent to the option. In the end, the ENTER key must be pressed to make the selection. For example, with menu window M14 for the selection of

pipe material selection, (the MENU 1 4 should be pressed first to enter this menu window if the current menu window is on a different window. The pipe material is stainless steel which has a number "1" antecedent to "stainless steel" on the display, the user should first press the ENTER key to enter into a selection modification mode, then either make the selection by pressing the ▲and ▼keys to make the cursor on the line that displays "1. Stainless Steel", or make the selection by pressing the 1 key directly.

Generally, the ENTER key must be pressed to enter a modification mode. If the "Locked M47 Open' message is indicated on the lowest line of the LCD display, it means the modification operations is locked out. In such cases, the user should go to M47 to have the instrument unlocked first before any further modification can be made.

3.4 MENU WINDOWS ARRANGEMENT

M00~M09 windows for the display of the flow rate, velocity, date time, totalizers, battery voltage and estimated working hours for the battery.

M10~M29 windows for entering the pipe parameter.

M30~M38 windows for flow rate unit selections and totalizers unit selections.

M40~M49 windows for response time, zeroing, calibration and modification password setup.

M50~M53 windows for the built-in logger

M60-M78 windows for time-keeper initialization, version and ESN information viewing and alarms.

M82 window for viewing date totalizers.

M90~M94 are diagnostic windows for a more accurate measurement.

M+0~M+8 are windows for some additional functions, including a scientific calculator, viewer on records such as total working hours, turn-on and turn-off times, dates and times when the heat meter has been turned on or turned off.

Other menu windows such as M88 have no functions, or functions were cancelled because they are not applied to this version of the software.

The major reason why the menu windows are arranged in this way is that the software programmer hopes that the menu window arrangement for this version has the most

compatibility with the previous versions of the DMHF dedicated model software. This will make it easier for the former version users with this heat meter Series.

3.5 STEPS TO CONFIGURE THE PARAMETERS

The following parameters need to be configured for a proper measurement:

- Pipe outer diameter (O.D.)
- Pipe wall thickness
- Pipe materials (for non-standard pipe materials*, the sound speed for the material must be configured too)

  *Standard pipe materials and standard liquids refer to those with the sound parameters that have already been programmed into software of the heat meter; therefore there is no need to configure them

- Liner material and its sound speed and thickness, if there is any liner.
- Liquid type (for non-standard liquids, the sound speed of the liquid is also needed)
- Transducer type adapted to the heat meter. Generally the Standard M1 or the Frame M-sized transducers will be the selected option.
- Transducer mounting methods (the V-method or Z-method is the common option)
- Check up the Space displayed on M25 and install the transducers accordingly.

For standard pipe materials and standard liquids, the following detailed step-by-step setup is recommended.

- Press keys MENU 1 1 to enter M11 window to input the digits for the pipe outer diameter, and then press ENTER key.
- Press key ∨ to enter M12 window to input the digits for the pipe outer diameter and then press ENTER key.
- Press key ∨ to enter M14 window, and press ENTER key to enter the option selection mode. Use keys ∧ and ∨ to scroll up and down to the intended pipe material, and then press ENTER key.
- Press key ∨ to enter M16 window, press ENTER key to enter the option selection mode, use keys ∧ and ∨ to scroll up and down to the liner material, and then press ENTER key. Select “No Liner”, if there is no liner.
- Press key ∨ to enter M20 window, press ENTER key to enter the option selection mode, use keys ∧ and ∨ to scroll up and down to the proper liquid, and then press ENTER key.

- Press key ∨ to enter M23 window, press ENTER key to enter the option selection mode, use keys ∧ and ∨ to scroll up and down to the proper transducer type, and then press ENTER key.
- Press key ∨ to enter M24 window, press ENTER key to enter the option selection mode, use keys ∧ and ∨ to scroll up and down to the proper transducer mounting method, and then press ENTER key.
- Press key ∨ to enter M24 window to install the transducers on the pipe, and then press ENTER key to go to M01 for the results.
- Press the MENU X X keys to directly enter Window No.XX to display Mxx contents. Where X is 0-9 digital number on keypad.

## 3.6 INSTALLATION CHECKUP

Through the checkup of the installation, one can: check the receiving signal strength, the signal quality Q value (M90), the measured traveling time of the signals and the calculated traveling time ratio (M91). Therefore, optimum measurement result and longer running time of the instrument can be achieved.

### 3.6.1 SIGNAL STRENGTH

Signal strength indicates the amplitude of receiving ultrasonic signals by a 3-digit number. [00.0] means there is no signal detected and [99.9] refers to the maximum signal strength that can be received.

Although the instrument works well if the signal strength ranges from 50.0 to 99.9, stronger signal strength should be pursued, because a stronger signal means a better result. The following methods are recommended to obtain stronger signals:

- Relocate a more favorable location, if the current location is not good enough for a stable and reliable flow reading, or if the signal strength is lower than 70.0.
- Try to polish the outer surface of the pipe, and apply more coupler to increase the signal strength.
- Adjust the transducers both vertically and horizontally while checking the varying signal strength, stop at the highest position, and then check the transducers spacing to make sure the transducers spacing is the same as what the M25 shows.

### 3.6.2 SIGNAL QUALITY

Signal quality is indicated as the Q value in the instrument. A higher Q value would mean a higher Signal and Noise Ratio (short for SNR), and accordingly a higher degree of accuracy would be achieved. Under normal pipe condition, the Q value is in the range 60.0-90.0, the higher the better.

Causation for a lower Q value could be:

- Interference of other instruments and devices such as a powerful transverter working nearby. Try to relocate the heat meter to a new place where the interference can be reduced.
- Bad sonic coupling for the transducers with the pipe. Try to apply more coupler or clean the surface, etc.
- Pipes are difficult to be measured. Relocation is recommended.

### 3.6.3 TOTAL TRANSIT TIME AND DELTA TIME

The numbers displayed on menu window M93 are called total transit time and delta time respectively. They are the primitive data for the instrument to calculate the flow rate inside the pipe. So the flow rate indication will vary accordingly with the total time and delta time.

The total transit time should remain stable or vary a little.

If the delta time fluctuates higher than 20%, it means there are certain kinds of problems with the transducer installation.

### 3.6.4 TIME RATIO BETWEEN THE MEASURED TOTAL TRANSIT TIME AND THE CALCULATED TIME (M91)

This ratio would be used to check the transducer installation. If the pipe parameters are entered correctly and the transducers are installed properly, the value for this ratio should be in the range of 100±3%. If this range is exceeded, the user should check:

- If the pipe parameters are correctly entered.
- If the actual spacing of the transducers is right and the same as what the window M25 shows.
- If the transducers are installed properly in the right directions.
- If the mounting location is good and if the pipe has changed shape or if there is too much fouling inside the pipes
- Other poor conditions.

# PART-4 MENU WINDOW DETAILS

**Windows Display Explanations**

| Menu Window Number | Functions/Display |
|---|---|
| M00 | Positive, negative, net total flow and run status |
| M01 | Positive total flow, flow rate , fluid velocity and run status |
| M02 | Negative total flow, flow rate , fluid velocity and run status |
| M03 | Net total flow, flow rate , fluid velocity and run status |
| M04 | Date, time, flow rate, run status |
| **M05** | **Total heat flow, heat flow rate, fluid velocity and run status**<br>EFR 0.0000kW<br>E.T 0E0kWh<br>Vel 0.0000 m/s<br>S=00.0, 00.0 Q=00 |
| M06 | Tin/Tout temperature value (4-20mA temperature sensor input for Heat flow measurement) |
| M07 | Meter run Error Code and run status |
| M08 | Net total flow today |
| **Above is display menu(M00-M08)** | |
| **M11** | Window for entering/changing the outside (outer) diameter of the pipe line. 0 to 4500 mm is the allowed range of the value. |
| M12 | Window for entering pipe wall thickness |
| M13 | Window for entering the inside(inner) diameter of the pipe(If user had entered the parameters of M11 and M12, M13 is not necessary to enter, automatically display and can't change) |
| M14 | Window for selecting pipe material, familiar pipe materials include:(The materials must be equable, compact and can transmit ultrasound)<br>0. Carbon steel 1. Stainless steel 2. Cast iron<br>3. Ductile iron 4. Copper 5. PVC |

| | |
|---|---|
| | 6. Aluminum 7. Asbestos 8. Fiberglass 9. Others |
| M16 | Window for selecting the liner material, select none for pipes without any liner. familiar liner materials include:<br>0. No liner 1. Tar Epoxy 2. Rubber 3. Mortar<br>4. Polypropylene 5. Polystryol 6. Polystyrene<br>7. Polyester. 8. Polyethylene 9. Ebonite 10. Teflon<br>11. Others |
| M18 | Window for entering the liner thickness, if there is liner |
| M20 | Window for selecting fluid type<br>familiar liquids types include:<br>0. Water 1. Sea Water 2. Kerosene<br>3. Gasoline 4. Fuel oil 5. Crude Oil 6. Propane at -45℃<br>7. Butane at 0 ℃ 8. **Other** * 9. Diesel Oil<br>10 .Castor Oil 11.Peanut Oil 12. #90 Gasoline<br>13. #93 Gasoline 14. Alcohol 15. Hot water at 125 ℃ |
| M21 | Window for entering the fluid sound speed **only** for **"other"** liquids. If M20 select "other", user must enter the fluid sound velocity (inquiry or estimate a suitable value); if you do not select "other" in Menu 20, M21 won't appear. |
| M22 | Window for entering the viscosity of the "**other"** liquids, unit of viscosity is cst. if you do not select "other" in Menu 20, M21 won't appear. |
| M23 | Window for selecting the proper transducer (XDCR) type. There are different types of transducers for DMHFB, opt. Standard-S, Standard-M, standard-L, DMHFC is Plug-in type B45.<br><br>M23<br>XDCR Type<br>0. Standard-M<br><br>Standard-S: Clamp-on small pipe, 15-40mm<br>Standard-M: Clamp-on standard pipe, 40-1000mm<br>Standard-L: Clamp-on large pipe, 1000mm-4500mm<br>Plug-in B45: Insertion, hot-tapped transducer, 65-4500mm |
| M24 | Window for selecting the transducer mounting method<br>Four methods can be selected:<br>0. V-method 1. Z-method 2. N (small pipe)<br>3. W-method (tiny pipe) |

| | |
|---|---|
| **M25**<br><br>***Important** | Display the transducer mounting spacing.<br><br>**Users need mount transducers exactly according to the spacing distance value M25 displays after users input correct parameter setting.** |
| **M26** | **Entry to store the parameter configurations into the internal memory. This is very important step, otherwise, if power off and power on again, the meter may can't memory the parameter configurations.** |
| M27 | Display liquid cross section area, provide user to validate flow rate or total flow display, commonly it's no matter with user. |
| M28 | Hold poor signal, YES is the default setup. If poor signal appears, meter still have a previous read. Commonly, don't change the default setup. |
| **M29** | **Empty Pipe Setup**, this is very useful for user, Empty pipe line or pipe shaking etc., meter may display error or undesired read, user can setup a Q value less than normal Q value, for example, normal Q value is 60-70, user can enter Empty Pipe Setup value 50, such, meter will display 0 flow rate when Q value is less than 50. In good pipe status, please do not setup this value too small. |
| **Above is initial parameter setup (M11-M29)** | |
| M30 | Window for selecting **Measurement Unit** system. Default value is 'Metric'. The change from English to Metric or vice versa will not affect the unit for totalizers. |
| M31 | Window for selecting **Flow Rate Unit**,<br>M31<br>Flow Rate Unit<br>M3/h<br><br>To change it, press key "ENTER", will display:<br><br>M31<br>Flow: Units/T<br>> **Cubic Meters**<br><br>The > is flashing, press scroll key ∧ or ∨ to select desired unit, then press "ENTER', to select time unit. will display:<br>The > is flashing, press |

| | |
|---|---|
| | M31<br>Cubic Meters<br>> **/T**<br><br>scroll key ∧ or ∨ to select desired time unit, then press "ENTER', then will display desired flow rate unit.<br><br>Flow rate unit can be in<br>0. Cubic Meters short for (m3)<br>1. Liter (l)<br>2. American Gallon (gal)<br>3. Imperial Gallon (igl)<br>4. Million Gallon (American) (mgl)<br>5. Cubic Feet (cf)<br>6. American Liquid Barrel (bal)<br>7. Imperial Liquid Barrel (ib)<br>8. Oil Barrel (ob)<br>The flow unit in terms of time can be per day, per hour, per minute or per second. So there are 36 different flow rate units in total for selection. |
| M32 | Window for selecting Totaliziers Units, working unit default is cubic meters, if change it, press ENTER, then press scroll key ∧ or ∨, to select desired unit. |
| M33 | Select Totalizer Multiplier<br>The multiplier ranges from 0.001 to 10000, default value is ×1, addition, if select total flow pulse output, this value represent one pulse corresponding value. |
| M34 | Turn on or turn off the NET Totalizer |
| M35 | Turn on or turn off the Positive Totalizer |
| M36 | Turn on or turn off the Negative Totalizer |
| M37 | Totalizer Reset, the following options are available:<br>No<br>YES<br>Restore the instrument to the default parameters as the manufacturer did (Reset system) by pressing the dot key [.] followed by the ◄ key. Take care or make note on the parameters before doing restoration |

| | |
|---|---|
| M38 | The Manual Totalizer is a separate totalizer, press "ENTER" to start, and press "ENTER" to stop it. It is used for flow measurement, calculation and manual calibration.<br>Press ENTER When Ready. |
| **Above is flow units options(M30-M38)** | |
| M40 | Flow rate Damping for displaying a stable read. The input range is 0 to 999 seconds.<br>0 means there is no damping. Default value is 10 seconds; common setup value is 1-10 seconds. |
| **M41** | Low Flow Cutoff, may be used in order to force a zero display at lower flows and avoid incorrect totalizer.<br>For instance, this value is 0.02m/s, the meter will display zero when flow rate is less than ±0.02m/s.<br>M41<br>Low Flow Cutoff<br>0.02m/s |
| **M42** | Set Zero, when the fluid is in the static state, the displayed value is called "zero point". When the "Zero Point" is not really at zero, the incorrect read value is going to be added into the actual flow values.<br>Set Zero must be carried out after the transducers are right installed and the flow inside is in the absolute static state (no liquid moved in the pipe line). Set Zero also is very important step when recalibrating the meter in lab. Doing this step enhances the measuring accuracy and flow offset can be eliminated. |
| M43 | Reset Zero, clear the zero point set by the user, and restore the zero point set by the manufacturer. |
| M44 | Manual Zero Point. Set up a manual flow offset. Generally this value should be 0. |
| **M45** | The Scale Factor is used to modify the measurement results, factory default is 1.0 or other value depend on calibration, please see the calibration data sheet and save this sheet. If really necessary, the user can enter a numerical value other than factory default value according to re-calibration results. |

| | |
|---|---|
| M46 | Network environment Identification Number for PC communication system. |
| M47 | System Lock, to avoid modification of the parameters, contact factory for the password. |
| M48 | Keypad Lock Code, enter a password in order to prevent unauthorized keypad operating. Unlock it only using the correct password. If forgot, contact factory for the password to unlock it. |
| M49 | Comm. Test, for communication test. |
| M50 | Data Logger Option,<br>M50<br>Logger Option<br>ON<br>If select data logger output, please select "ON", then, press "ENTER". |
| M51 | Time setup for the data logger<br>Set up Start time and Interval,<br>if "Go On" time is longer than<br>24 hours, please use dot key [.]<br>on Keypad, as below:<br>**:**:**<br>Means it is no time limit.<br>M51 Logger Time<br>Start 00:00:00<br>Interval 00:00:00<br>Go On 00:00:00<br>M51 Logger Time<br>Start 12:30:00<br>Interval 00:05:00<br>Go On **:**:** |
| M52 | Data logging direction control. Only Select 'To RS-232', all the data produced by the data logger will be transmitted out through the RS-232 interface. |
| **M53** | **CL Calibration**<br>4-20mA output calibration,<br>Press ENTER when ready<br>M53<br>CL Calibration<br>ENTER When Ready<br>Meter window will display:<br>Use a Ammeter to verify<br>4mA output, if not, use<br>key ∧ or ∨, let the<br>output is 4.0mA<br>M53<br>CL Calibration<br>4mA==>**-035_** |

| | |
|---|---|
| | Use the same way, let the Output is 20.0mA This function mainly used by DMHF manufacturer.<br>M53<br>CL Calibration<br>20mA==>**-100_** |
| M54 | CL Mode Select<br>Select Current Loop output mode<br>Use key ∧ or ∨,can select different mode:<br>M54<br>CL Mode Select<br>**0. 4-20mA**<br>4-20MA, 0-4-20MA, 0-20MA, 20-4-20MA etc.<br>It is useful if negative flow occurs.<br>For instance, select 0-4-20MA output; user can define 0-4MA as negative flow, 4-20MA as positive flow. |
| M55 | CL(Current Loop) 4 MA output Value<br>The flow unit's options are the same as Those in Menu 31.<br>M55<br>CL 4mA OutputVal<br>**0 m3/h** |
| M56 | CL(Current Loop) 20MA output Value<br>The flow unit's options are the same As those in Menu 31.<br>Press Enter to change the displayed Value.<br>M56<br>CL 20mA Output<br>**2000m3/h** |
| M57 | CL Checkup<br>Press ENTER When Ready.<br>It is necessary to re-calibrate the CL output according user's actual Output, the method is similar with M53.<br>M57<br>CL Checkup<br>ENTER When Ready<br>User can check up 0MA, 4 MA, 8MA, …20MA etc. output. |
| M58 | CL Output Display |
| M60 | Setup the date and time of the meter.<br>Press ENTER to change it if necessary. |
| **Above is service options and CL output applications** | |
| M61 | Display Version information and Electronic Serial Number (ESN) that are unique for each series DMHF heat meter. |
| M62 | RS232C communication setup |

| | |
|---|---|
| | Commonly, user should select "9600, None"<br>9600 is baud rate, check bit is "None".<br>M62<br>RS-232C Setup<br>9600, None |
| M63 | Analog input temperature sensor range value for heat flow application, wiring terminals is Tin+, Tin-. Press ENTER and use key ∧ or ∨ to input value corresponding 4mA and 20mA |
| M64 | Analog input temperature sensor range value for heat flow application, wiring terminals is Tout+, Tout-. Press ENTER and use key ∧ or ∨ to input value corresponding 4mA and 20mA |
| M65* | Setup the frequency range for the frequency output. The biggest range is 0Hz-9999Hz. Default value is 1-1001 Hz. Refer **5.10**, for terminal wiring explanation. |
| M66 | Setup the Low Frequency Output corresponding Value of Flow Rate. This value correspond to the lowest Frequency value entered in M65.<br>M66<br>Low FO Flow Rate<br>0 m3/h |
| M67 | Setup the High Frequency Output corresponding Value of Flow Rate. This value correspond to the highest Frequency value entered in M65.<br>M67<br>High FO Flow Rate<br>3000 m3/h |
| M70 | LCD Backlit option. User can select "Always On", Always Off" or "Lighting for" items, if select "Lighting for", please entered a second value, it indicates how many seconds the backlight will be on. |
| M71 | LCD contrast control. The LCD will become darker when a small value is entered. |
| M72 | Working timer. It can be cleared by pressing ENTER key, and then select YES. Before instrument shipped, We have calibrated and tested, so working timer is usually not zero. |
| M73 | Alarm #1 LowValue<br>Enter Lowest Flow Rate value that will trigger the Relay wiring terminal output Alarm. |

| | |
|---|---|
| M74 | Alarm #1 HighValue<br>Enter Highest Flow Rate value that will trigger the Relay wiring terminal output Alarm. |
| M75 | Not used |
| M76 | Not used |
| M77 | Buzzer setup.<br>If a proper input source is selected, the buzzer will beep when the trigger event occurs<br>0. No Signal 1. Poor Signal<br>2.Not Ready --state error 3.Reverse Flow<br>4 .Analog Output overflow100%<br>5. Frequency Output overflow120%<br>6. Alarm #1 7. Alarm #2 (not used)<br>8. Batch Control 9. Positive Int Pulse<br>10. Negative Int Pulse 11.Energy Pulse<br>12. ON/OFF via RS232<br>13. Fluid Changed –fluid sound speed changed<br>14. Key Stroke ON–ring when press key<br>15. Not using–close the buzzer |
| M78 | OCT output Selection (Pulse output for flow rate) |
| M79 | Relay Output Setup |
| M80 | Flow Batch Control |
| M81 | Setup Flow Batch Control Value |
| M82 | The history logger of net totalizer<br>net totalizer of day<br>net totalizer of month<br>net totalizer of year |
| M83 | Auto. Correction<br>Auto gain the totalizer flow if system power off |
| M84 | Heat Flow Unit: KWh; Kc |
| M85 | Temp. Selection: 0. From T1, T2 input<br>1. Fixed temperature difference |
| M86 | Specific Heat Selection |
| M87 | Heat Flow Totalizer |
| M88 | Heat Flow Multiplier |

| | |
|---|---|
| M89 | Reset Heat Flow Totalizer |
| **M90** | Display signal strength, signal quality,<br>IMPORTANT<br>When installing the transducers,<br>Let Q Value at least ≥60<br><br>M90<br>Strenth + Quality<br>S=00.0, 00.0 Q=00 |
| **M91** | Displays the Time Ratio between the Measured Total Transit Time and the Calculated time. If the pipe parameters are entered correctly and the transducers are properly installed, the ratio value should be in the range of 100±3%. Otherwise the entered parameters and the transducer installation should be checked.<br><br>M91<br>TOM/TOS*100<br>0.0000% |
| M92 | Displays the measured fluid sound speed. Normally this value should be approximately equal to the entered value in Menu 21 when M20 the fluid type selects "**Other**". If this value has an obvious difference with the actual fluid sound speed, pipe parameters entered and the transducer installation should be checked again. If Menu20, the fluid type doesn't select "**Other**", this window is no matter with user. |
| M-1 | Calibrate T1 at 0℃, We have already done the calibration in our laboratory(the same for M-2, M-3, M-4), so customers do not need to calibrate. When the value has been changed or need to recalibrate, customers can calibrate the value yourselves. |
| M-2 | Calibrate T1 at 200℃ |
| M-3 | Calibrate T2 at 0℃ |
| M-4 | Calibrate T2 at 200℃ |

Note 1: Some contents in window menu order are not displayed in new software version, it won't influence user to use DMHFP, just press ∧ or ∨ to scroll the menu window or directly press MENU and digit number and view or setup necessary menu contents.

# PART-5 ENERGY FUNCTION

## 5.1 Introduction

Series DMHFP portable heat meter owns an in-built module for energy calculation. It can calculate the thermal enthalpy of the liquid of a certain temperature automatically. Accordingly we can calculate the heat flow and totalizer. Temperature signal is input by analog hardware T1, T2 which can only receive 4-20mA and 0-20mA current signal.

All above results can be transferred to host computer through a communication protocol of the portable Heat Meter. In this case, DMHFP portable heat meter works as data monitoring network RTU, greatly decrease the complexity, cost and enhancing the reliability of the hardware of devices.

## 5.2 Wiring Connection

Analog input can be connected to four 4-20mA temperature signal from outside. When calculating energy, T1 connects to inlet sensor and T2 to outlet sensor.

Menu06 displays the corresponding temperature.

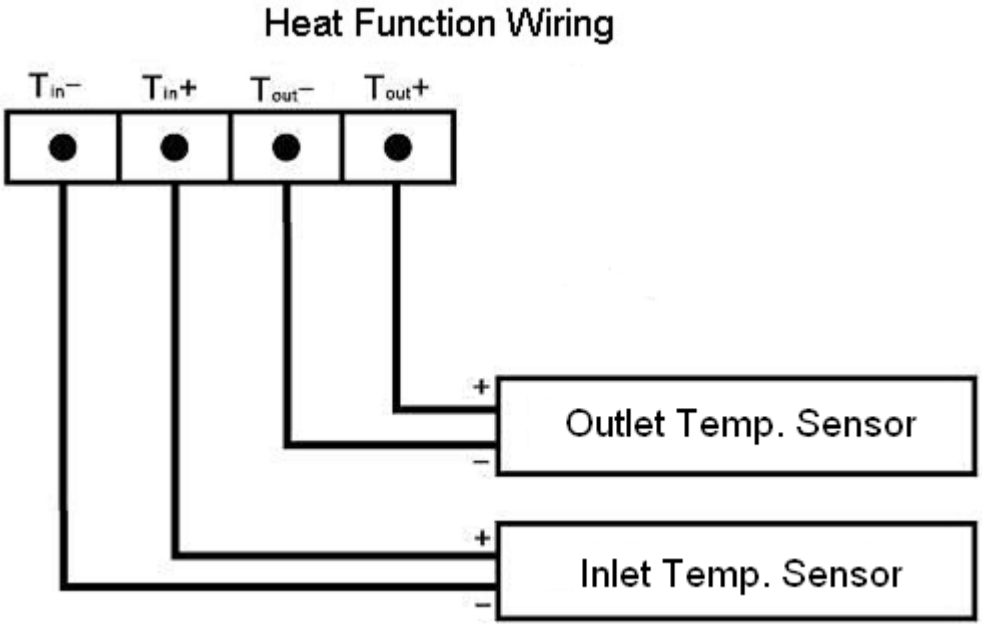


## 5.3 Energy Calculation

We have two Methods to calculate energy：

Method 1)：Energy=Flow×Temp. Difference×heat capacity （Where：Temp. Difference refers to the temperature difference between Tin and Tout; heat capacity is in Menu 86, commonly it is -1.16309KWh/m3℃）

Method 2): Energy = Flow×(thermal enthalpy at T1 temp.- thermal enthalpy at T2 temp.) This thermal enthalpy is automatically calculated by heat meter according to international standard.

Menu 84 Energy unit selection, kWh, KC optional.

Menu 85 Temperature Signal Origin Selection

0. From T1, T2 input
1. Fixed temperature difference

Menu 86 Select the specific heat to display according to international standard or fixed value.

Select >0.GB for energy unit KC

**Select >1. Fix Spec. Heat for energy unit KWh**

Menu 87 Open or Close energy flow totalizer.

Menu 88 Totalizer multiplication factor selection

Menu 89 Reset Zero energy totalizer.

If the liquid temperature goes steady, use can remove the temperature sensor and calculate the energy according to the estimated temperature difference.

## 5.4 Temperature Range

Temperature range is defined in Menu63 and Menu64. The first digit in Menu refers to the analog signal value input at 4mA current, the second digit refers to the analog signal value input at 20mA current.

For example, at the condition that when temperature sensor outputs 4mA current, temperature is 0℃, and outputs 20mA current, temperature is 200℃, this temperature sensor is connected to T1, and user needs to input 0, 200 in Menu63. User can check the displayed current value and temperature value in Menu 06.

# PART-6 TEMPERATURE SENSOR INSTALLATION

## 6.1 PT1000 TEMPERATURE SENSOR

DMHF heat meter utilizes two PT1000 temperature sensors, and the temperature sensors are matching. Temperature sensor cable is provided by manufacturer, and the standard length is 6m.

For measurement accuracy, test security, convenient maintenance, and not affect equipment operation and production operation, we should pay attention to the following before installation:

1. Should be rationally choose installation position, avoid the valve, elbow and equipment installed with thermal resistance.

2. For measuring the fluid temperature of pipe center, generally the measurement terminal is inserted into the pipe in the center.

3. Water supply temperature sensor (high temperature point) must be installed in flow transducer downstream side, and is apart from the downstream flow transducer 5DN.
The return water temperature sensor (low temperature point) should choose the position where is in recent from water supply temperature sensor.

## 6.2 TEMPERATURE SENSOR INSTALATION

### 6.2.1 CLAMP-ON TEMPERATURE SENSOR

When determining the installation position of temperature sensor, we should pay attention to the pipeline surface. Pipeline surface must be clean before installing temperature sensor, then use belts to fix temperature sensor.

### 6.2.2 INSERTION TEMPERATURE SENSOR

The insertion temperature sensor is directly contact with measured fluid, so its accuracy is higher. We have two methods to install insertion temperature sensor.

1. Installing by ball valve

For weldable pipe material, weld ball valve on pipe directly. For unweldable pipe material, first welding a hoop (Usually material is carbon steel) on pipe, then welding ball valve on hoop.

After welding ball valve, drill a suitable hole. Drill into the pipe wall in accordance with the instructions supplied with the drilling machine, at first, please select the slow tap position to drill hole, then select fast tap position.

After drilling a hole, plug in the insertion temperature sensor, adjust the insertion depth, then fix it.

2. Installing on pipe directly

Drill a suitable hole on pipe directly, plug in the insertion temperature sensor, adjust the insertion depth, then fix it.

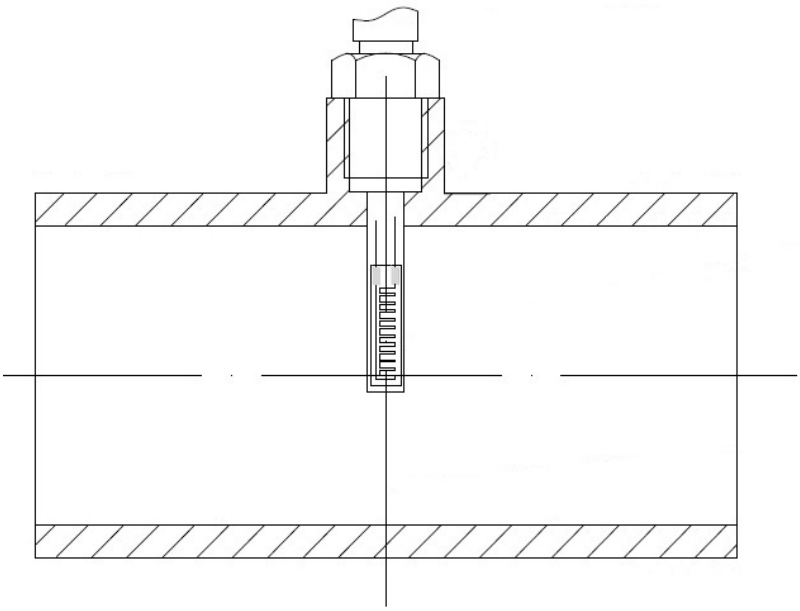

Note: The cables of two temperature sensor must be the same length.

# PART-7 HOW TO USE MENU FUNCTIONS

## 7.1 HOW TO JUDGE WHETHER THE INSTRUMENT WORKS PROPERLY?

Generally speaking, when '**R**' is displayed in the lowest right corner of LCD display, the instrument is working properly.
If an '**H**' flashes on that place, there could be poor signal received. Please refer to the chapters on diagnosis.
If an '**I**' is displayed, it means that there is no signal detected.
If a '**J**' is displayed, it means that the hardware of this instrument could be out of order. Refer to the chapter on diagnosis.

## 7.2 HOW TO JUDGE THE LIQUID FLOWING DIRECTION?

Make sure that the instrument works properly
Check the flow rate for the indication. If the displayed value is positive, the direction of the flow will be from the UP transducer to the Down transducer; if the displayed value is negative, the direction will be from the Down transducer to the UP transducers;
Check the flow rate, if the display value is "+", will it is positive. If the display value is "-" , It is negative.

## 7.3 HOW TO RESET THE DEFAULT SETUPS?

Use M37, it has another function to recover the default setups. When the 'selection' message is displayed, press the dot key [.] first, then press key [◄] then press ENTER, meter will erase all the parameters entered by the user and setup the meter with default values.

## 7.4 HOW TO STABILIZE THE FLOW?

The damping acts as a filter for a stable reading. If '0' is entered in window M40, that means there is no damping. A bigger number brings a more stable effect. But bigger damping numbers will prevent the instrument from acting quickly. Numbers 0 to 10 are commonly used for the damping value.

## 7.5 HOW TO USE THE ZERO-CUTOFF FUNCTION?

The number displayed in window M41 is called the low-cutoff value. The heat meter will replace these flow rate values that are absolutely less than the low-cutoff value with '0'. This means the heat meter will avoid any invalid accumulation when the actual flow is below the zero-cutoff value.

The low-cutoff value does not affect the flow measurement when the actual flow is absolutely greater than the low-cutoff value.

## 7.6 HOW TO SETUP A ZERO POINT CALIBRATION?

It is necessary to establish the true zero flow condition and program that set point into the instrument. If the zero set point is not at true zero flow, a measurement difference may occur. Because every heat meter installation is slightly different and sound waves can travel in slightly different ways through these various installations, a provision is made in this entry to establish "True Zero" flow – SETUP ZERO.

There exists a 'Zero Point' with certain installation which means the heat meter will display a non-zero value when the flow is absolutely stopped. In this case, setting a zero point with the function in window M42 will bring a more accurate measurement result. When do a calibration test, it is also very important.

Make sure that the pipe is full of liquid and the flow is absolutely stopped - securely close any valves and allow time for any settling to occur. Then run the function in window M42 by press the MENU 4 2 keys, then press ENTER key and wait until the counter readings displayed in the lower right corner of the screen goes to "00"; thus, the zero set is completed and the instrument indicates the results automatically through Window No.01. Repeat zero set calibration if it still needs to be minimized, i.e. the velocity reading is still high.

## 7.7 HOW TO USE SCALE FACTOR?

Scale factor refers to the ratio between "actual value" and "reading value". For instance, when the measurement is 2.00, and it is indicated of 1.98 on the instrument, the scale factor reading is 2/1.98. This means that the best scale factor constant is 1. However, it is difficult to keep the scale factor as "1" on the instrument especially in batch control operations. The difference is called "consistency". High quality products always require high consistency.

The scale factor default is "1"or a factory calibration value (see the calibration data sheet for every meter) for each instrument prior to shipment from the factory. The scale factor entered must be one that results from actual calibration. Re-calibration or change the Scale factor may be necessary on different pipe lines or different applications in order to obtain better accuracy.

## 7.8 HOW TO USE THE OPERATION LOCKER?

The system locker provides a means of preventing inadvertent configuration changes or totalizer resets. Using the menu 48 when the system is locked, menu window browsing can be done without affecting any change, but any modifications are prohibited.

The system can be locked with a one 1 to 8 digit password.

If the password is forgotten, please contact the factory for a common password.

## 7.9 HOW TO USE THE 4~20mA OUTPUT?

Refer to Menu 53, 54, 55, 56, 57, 58. Possessing a current loop output exceeding an accuracy of 0.1%, the DMHF is programmable and configurable with multiple output modules such as 4 ~20mA or 0~20mA. Select in Window M54. For details, please refer to Part 4 – Windows Display Explanations. In Window M55, enter a 4mA flow value. Enter the 20mA flow value in Window M56. For instance, if the flow range in a specific pipe is 0~1000m3/h, enter 0 in Window M55 and 1000 in Window M56. If the flow ranges from -1000~0~2000m3/h, configure the 20~4~20mA module by selecting Window M54 when flow direction is not an issue. Enter -1000 in Window M55 and 2000 in Window M56. When flow direction is an issue, module 0~4~20mA is available. When the flow direction displays as negative, the current output is in range of 0~4mA, whereas the 4~20mA is for the positive direction. The output module options are displayed in Window M54. Enter "-1000" in Window M55 and 2000 in Window M56. Calibrating and testing the current loop is performed in Window M57. Complete the steps as follows: Press Menu, 5, 7, ENTER, move ∧or ∨ to display "0mA", "4mA", "8mA", "16mA", "20mA" readings, connect an ammeter to test the current loop output and calculate the difference. Calibrate it if the difference is within tolerance. Check the present current loop output in Window M58 as it changes along with change in flow.

## 7.10 HOW TO USE THE FLOW RATE FREQUENCY OUTPUT?

**Only For Flow Rate Output.**

DMHFP also can provide a frequency output transmitter function. The find accessory OCT output connect cable, red is +, black is GND, refer to below wiring diagram Figure 5.1, A, B is DC power supply based on pulse receiver voltage, 5-24V is allowable. C,D is pulse input for receiver. Select a resistor that is a maximum of 10% of the input impedance of the receiving device, but do not exceed 10k ohms.

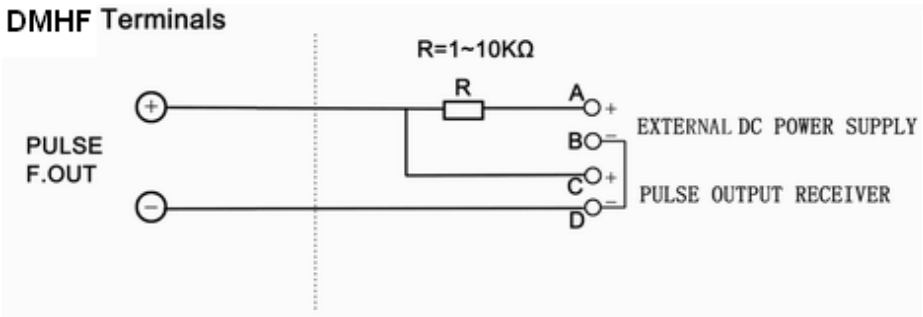


Figure 7.1

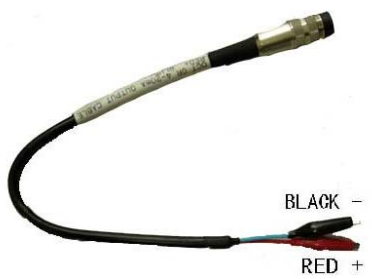

High or low frequency output displayed indicates the high or low flow rate reading. The user can reset the frequency output as well as flow rate per his requirements For instance: if a pipe flow range is 0~2000m3/h, the relative frequency output required is 10~1000Hz, and the configuration is as follows:
In Window M66 (low limit frequency output flow value), input 0;
In Window M67 (high limit frequency output flow value), input 2000;
In Window M65 (Select frequency range), Press ENTER, input Low FO frequency 10, Press ∨ , input 1000.
There is no output circuit specially assigned to frequency output. It need to be powered through OCT, and select item FO in Window M78 (item "FO"—Frequency output.).

## 7.11 HOW TO USE RELAY OUTPUT

Relay output **only for Totalizer Output or Relay Alarm Output.**
The relays are rated for 150VDC maximum and have a current rating of 0.18A resistive load. Turn on duration: typical 0.65ms, max. 2.0ms; Turn off duration: typical 0.08ms, max. 2.0ms; Conduction resistance 0.83 ohms, max. 1.63 ohms, output capacitance: 1.5PF. I/O Terminal isolation voltage: 1500VAC.

Once the transmitter is powered on, the "RELAY +, -" output is normally Open state.

When the relay is used for totalizer output, connect terminal "RELAY + -", select the corresponding totalizer in Menu 79, and setup the minimum display totalizer increments in Menu 33. Every time the totalizer increases a value set in M33, the relay closed one time.

When the relay is used for alarm output, connect terminal "RELAY + -", select the corresponding item in Menu 79, it can be used for several alarm condition. For example, select "Alarm #1", set "Alarm #1 Low Value" in Menu 73, and set "Alarm #1 High Value" in Menu 74. When the flow is between the low value and high value, the relay is open state, and when the flow is lower than "Low Value", or higher than "High Value", the relay is closed state.

## 7.12 HOW TO SET THE DATE AND TIMER

Use the windowM60, press ENTER key and then input the new data and the new time.
Press the ENTER key to confirm

## 7.13 ON/OFF NET TOTALIZER

Window M34 is available to turn net totalizer on and off net. Window No.35 is available to turn the positive totalizer on and off, while Window No.36 is for the negative totalizer. Select "On" to activate the totalizer and "Off" to de-activate the totalizer.

## 7.14 UNITS OPTIONS

Measurement units options, Metric or English, select M30, Press ENTER, and scroll the ∧ or ∨ to select units; Flow rate units, Select M31, Press ENTER, and scroll the ∧ or ∨ to select units. Details please refer to Part 4, Windows Display Explanations.

## 7.15 LCD BACKLIT OPT IONS

Adjustment the backlighting in window M70, press MENU, 7 , 0 , then press ENTER, then use ∧ or ∨ to scroll the menu, to select backlit options.

## 7.16 USE MENU WINDOWS FOR TRANSDUCER MOUNTING INSPECTION

### 7.16.1 Signal Strength

Signal strength (displayed in Window M90) indicates a detected strength of the signal both from upstream and downstream directions. The relevant signal strength is indicated by numbers from 00.0~99.9 in the DMHF. 00.0 represents no signal detected while 99.9 represent maximum signal strength.

Normally, the stronger the signal strength detected, the instrument will work more reliably, as well as the more stable the measurement value obtained.

Adjust the transducer to the best position and check to ensure that enough sonic coupling compounds is applied adequately during installation in order to obtain the maximum signal strength. System normally requires signal strength over 60.0, which is detected from both upstream and downstream directions. If the signal strength detected is too low, the transducer installation position and the transducer mounting spacing should be re-adjusted and the pipe should be re-inspected. If necessary, change the mounting to the Z method.

### 7.16.2 Signal Quality (Q value)

Q value is short for Signal Quality (displayed in Window M90). It indicates the level of the signal detected. In the DMHF, Q value is indicated by numbers from 00~99. 00 represents the

minimum signal detected while 99 represent the maximum. Normally, the transducer position should be adjusted repeatedly and coupling compound application should be checked frequently until the signal quality detected is as strong as possible.

### 7.16.3 Total Time and Delta Time

"Total Time and Delta Time", which displays in Window No.93, indicates the condition of the installation. The measurement calculations in the heat meter are based upon these two parameters. Therefore, when "Delta Time" fluctuates widely, the flow and velocities fluctuate accordingly. This means that the signal quality detected is too poor. It may be the resulted of poor pipe-installation conditions, inadequate transducer installation or incorrect parameter input. Generally, "Delta Time" fluctuation should be less than ±20％. Only when the pipe diameter is too small or velocity is too low can the fluctuation be wider.

### 7.16.4 Transit Time Ratio (M91)

Transit Time Ratio indicates if the transducer mounting spacing is accurate. The normal transit time ratio should be 100±3% if the installation is proper. Check it in Window M91.If the transit time ratio is over 100±3%, it is necessary to check (1) if the parameters (pipe outside diameter, wall thickness, pipe material, liner, etc.) have been entered correctly, (2) if the transducer mounting spacing is accordance with the display in Window M25, (3) if the transducer is mounted at the pipe's centerline on the same diameter, or (4) if the scale is too thick or the pipe mounting is distorted in shape, etc.

### 7.16.5 Warnings

1 Pipe parameters entered must be RIGHT; otherwise the heat meter will not work properly.

2 During the installation, apply enough coupling compounds in order to stick the transducer onto the pipe wall. While checking the signal strength and Q value, move the transducer slowly around the mounting site until the strongest signal and maximum Q value can be obtained. Make sure that the larger the pipe diameter, the more the transducer should be moved. Check to be sure the mounting spacing is accordance with the display in Window M25 and the transducer is mounted at the pipe's centerline on the same diameter. Pay special attention to those pipes that formed by steel rolls (pipe with seams), since such pipe is always irregular. If the signal strength is always displayed as 0.00, that means there is no signal detected. Thus, it is necessary to check that the parameters (including all the pipe parameters) have been entered accurately. Check to be sure the transducer mounting method has been selected properly, the pipe is not worn-out, and the liner is not too thick. Make sure there is there is indeed fluid in the pipe or the transducer is not very close to a valve or elbow, and there are not too many air bubbles in the fluid, etc. With

the exception of these reasons, if there is still no signal detected, the measurement site has to be changed.

3 Make sure that the heat meter is able to run properly with high reliability. The stronger the signal strength displayed, the higher the Q value reached. The longer the heat meter runs accurately, the higher the reliability of the flow rates displayed. If there is interference from ambient electromagnetic waves or the signal detected is too poor, the flow value displayed is not reliable; consequently, the capability for reliable operation is reduced.

4 After the installation is complete, power on the instrument and check the result accordingly.

# PART-8 Troubleshooting and Frequently Asked Questions and Answers

## 8.1 TROUBLESHOOTING

The DMHF Heat Meter has advanced self-diagnostics functions and displays any errors in the upper right corner of the LCD via definite codes in a date/time order. Hardware error diagnostics are usually performed upon each power on. Some errors can be detected during normal operation. Undetectable errors caused by incorrect settings and unsuitable measurement conditions can be displayed accordingly. This function helps to detect the errors and determine causes quickly; thus, problems can be solved in a timely manner according to the solutions listed in the following tables.

Errors displayed in the DMHF are divided into two categories: Table 1 is for errors displayed during self-diagnostics upon power on. "* F" may be displayed on the upper left corner of the screen after entering the measuring mode. When this occurs, it is necessary to power on for self-diagnostics once again to detect and solve possible errors using the table below. If a problem still exists, please contact the factory or the factory's local representative for assistance.

Table 2 applies when errors caused by incorrect settings and signals are detected and are announced by error codes displayed in Window M07.

**Table 1. Self-diagnoses and error solutions (upon power on)**

| LCD Display | Cause | Solution |
|---|---|---|
| Rom Parity Error | * System ROM illegal or error | * Contact the factory |
| Stored Data Error | * System stored data block error | * Power on again or contact the factory |
| SCPU Fatal Error! | * SCPU circuit fatal error | * Power on again or contact the factory |
| Timer Slow Error<br>Timer Fast Error | * System clock error | * Contact the factory |
| CPU or IRQ Error | * CPU or IRQ problem | * Power on again |
| System RAM Error | * System RAM questionable | * Power on again or contact the factory |
| Time or Bat Error | * System date time chip error | * Power on again or contact the factory |
| No Display, Erratic or Abnormal Operation | * Bad wiring connection | * Check wiring connections |
| Stroke Key -No Response | *Keypad locked or bad plug connection | * Enter the unlock password if the keypad is locked |

**Table 2. Error codes and solutions (during operation)**

| Code | M08 Display | Cause | Solution |
|---|---|---|---|
| *R | System Normal | * System normal | No errors |
| *J | SCPU Fatal Error | * Hardware defect | * Contact the factory |
| *I | Signal Not Detected | *Signal not detected. *Spacing is not correct between the transducers or not enough coupling compound applied to face of transducers. * Transducers installed improperly. * Scale is too thick. * New pipe liner. | * Attach transducer to the pipe and tighten it securely. Apply a plenty of coupling compound on transducer and pipe wall. * Remove any rust, scale, or loose paint from the pipe surface. Clean it with a file. * Check the initial parameter settings. * Remove the scale or change the scaled pipe section. Normally, it is possible to change a measurement location. The instrument may run properly at a new site with less scale. * Wait until liners solidified and saturated. |
| *H | Low Signal Strength | * Low signal strength. * Cause refers to above-mentioned reasons. | * Solution refers to above-mentioned solutions. |
| *H | Poor Signal Quality | * Poor signal quality * All reasons are included in the above-mentioned causes. | * Solution refers to above-mentioned solutions. |
| *E | Current Loop over 20mA (No influence normally. Ignore it if no current output is being used.) | * 4-20mA current loop over 120%. * Improper settings to current loop output. | * Check settings（refer to Window M56）and confirm if actual flow is too high. |

| | | | |
|---|---|---|---|
| *Q | Frequency output over set value No influence normally. Ignore it if no frequency output is being used. | * Frequency output over 120%.<br>* Improper settings to frequency output or actual flow are too high. | * Check settings（refer to Window M66-M69）and confirm if the actual flow is too high. |
| *F | Refer to Table 1. | * Error in self-diagnoses during power on.<br>* Permanent hardware error. | * Power on again; resolve it by the method listed in Table 1. If it is still a problem, contact the factory. * Contact the factory. |

8.2 FREQUENTLY ASKED QUESTIONS AND ANSWERS

**Q**: **New pipe, high quality material, and all installation requirements met: why still no signal detected?**

**A:** Check pipe parameter settings, installation method and wiring connections. Confirm if the coupling compound is applied adequately, the pipe is full of liquid, transducer spacing agrees with the screen readings and the transducers are installed in the right direction.

**Q: Old pipe with heavy scale inside, no signal or poor signal detected: how can it be resolved?**

**A:** Check if the pipe is full of fluid. Try the Z method for transducer installation （If the pipe is too close to a wall, or it is necessary to install the transducers on a vertical or inclined pipe with flow upwards instead of on a horizontal pipe).Carefully select a good pipe section and fully clean it, apply a wide band of coupling compound on each transducer surface (bottom) and install the transducer properly. Slowly and slightly move each transducer with respect to each other around the installation point until the maximum signal is detected. Be careful that the new installation location is free of scale inside the pipe and that the pipe is concentric (not distorted) so that the sound waves do not bounce outside of the proposed area. For pipe with thick scale inside or outside, try to clean the scale off, if it is accessible from the inside. （Note: Sometimes this method might not work and sound wave transmission is not possible because of the a layer of scale between the transducers and pipe inside wall）.

**Q: Why is there no CL (current loop) output?**

**A**: Check if the desired current output mode is set in Window M55. See if the CL is powered off by “CL Off” settings. Open the electronics enclosure to inspect the hardware circuit. Check to see if the short-circuit terminal near terminal3 is in place between 1-2, i.e. Direct Output Mode （at location 2-3, set CL output as Transmitter Mode with external power supply）.

**Q: Why is the CL output abnormal?**

**A**: Check to see if the desired current output mode is set in Window M55.Check to see if the maximum and minimum current values are set properly in Windows M56 and M57.Re-calibrate CL and verify it in Window M49.

**Q: Why is the flow rate still displayed as zero while there is fluid obviously inside the pipe and a symbol of "R" displayed on the screen?**

**A**: Check to see if "Set Zero" was carried out with fluid flowing inside the pipe（Refer to Window M42）. If it is confirmed, recover the factory default in Window M43.

**Q: With a poor measurement site environment in the plant and the voltage and power supplies fluctuating widely, is the instrument really able to keep running 24 hours a day repeatedly without stopping and last for several years under such conditions?**

**A**: DMHF is designed to work with high reliability under such conditions. It is provided with an intelligent signal conditioning circuit and internal correction circuitry. It will work under strong interference conditions and is able to adjust itself with strong or weak sound waves.

**Q: Why is the pipe not full of liquid or no flow in pipe, but still displays an unstable or wrong reading?**

**A:** Pipe must be full of liquid, if not, ENTER the menu window M29, setup a EMPTY PIPE Q VALUE less than normal Q value (pipe is full of liquid), cut off abnormal reading, DMHF will display Zero reading.

# PART-9 WARRANTY AND SERVICE

## 9.1 WARRANTY

The manufacturer provides one year warranty on all products, free of charge, but the users should be responsible for the one-way transportation fee from the customer to the factory.

## 9.2 SERVICE

The manufacturer provides instrument installation for our customers, and the charges will be made according the cost.

(1) For any hardware failure of the instrument, we recommend that our customers send back the instrument to our factory for service, due to the fact that the instrument is made of microprocessors and it will be difficult to perform field maintenance. Before sending back the instrument, please try to contact the factory first to make sure what the problem is.
(2) For other operational problems, please contact our local distributor by telephone, fax or email. In most cases, the problem could be solved immediately.

# APPENDIX 1 MOUNTING FRAME INSTALLATION

## 1. INTRODUCTION

The mounting frame is designed for clamp-on transducer installation, it make the installation simple, allocation precise, fixation stable, and it also can meet to multiple transducer mounting metheds.

## 2. PARTS LIST

Table 1 Parts List

| Parts Name | Quantity | Use | Picture |
|---|---|---|---|
| Brackets | 2 | To install transducer | 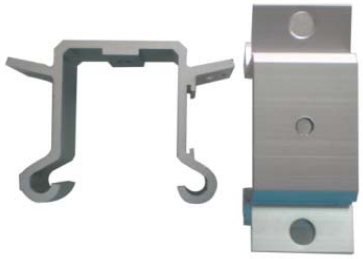 |
| Guide Rods | See table 2 | To fix brackets |  |
| Graduated Scale | 1 | Position transducer precisely |  |
| Copper Screws | 2 | To fix bracket and metal chains |  |
| Metal Chains | 2 | To surround pipe and fix brackets |  |
| Latchs | 4 | To connect brackets and chains |  |
| Nuts | 2 | To fix copper screws |  |

| | | | |
|---|---|---|---|
| Combination Screws | 5 | To fix guide rods and graduated scale |  |
| Screws | 2 | To fix transducer |  |

The guide rods have two types: one type is rods with inside thread, and the other is rods with outside thread. The guide rod with outside thread is used to extend the guide rod, and it is suitable for mounting frame installing on large pipe.

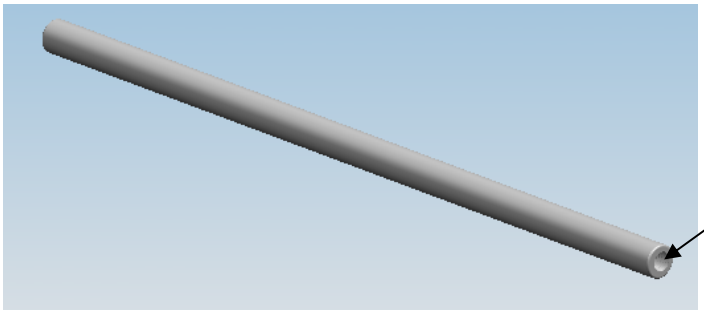


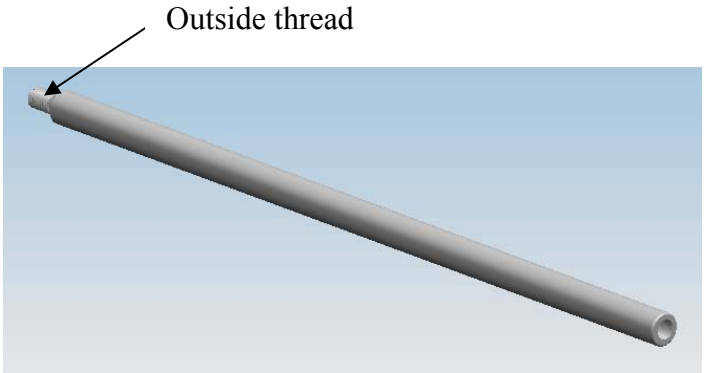


Table 2 Guide Rods Quantity

| Pipe size | 50～250mm | 250～600mm | 600～1000mm |
|---|---|---|---|
| Quantity of guide rods | Two rods with inside thread | Two rods with inside thread<br>Two rods with outside thread | Two rods with inside thread<br>Four rods with outside thread |

# 3. INSTALLATION STEPS

## 3.1 Installation Steps for V and W Transducer Mounting Method

When using V or W method to install transducers, install the two transducers on the same side of pipeline.

**A, Install the guide rods.**
In the parts list, there are two brackets, and the two brackets are exactly the same. Select one bracket, and install guide robs on it.

Use combination screw to fix guide rob

Use guide rob with inside thread. Here is no inside thread end, and keep this end face and bracket at the same plane.

When finishing guide rods installation, it will be shown as the following picture. If measured pipe size is larger than 250mm, it should add guide robs with outside thread. The inside thread rob is connected to outside thread rob through thread.

**B, Install graduated scale.**
When installing graduated scale, the graduated side faces up, shown as the following pictures. Fix graduated sacle's end with a hole by combination screw.

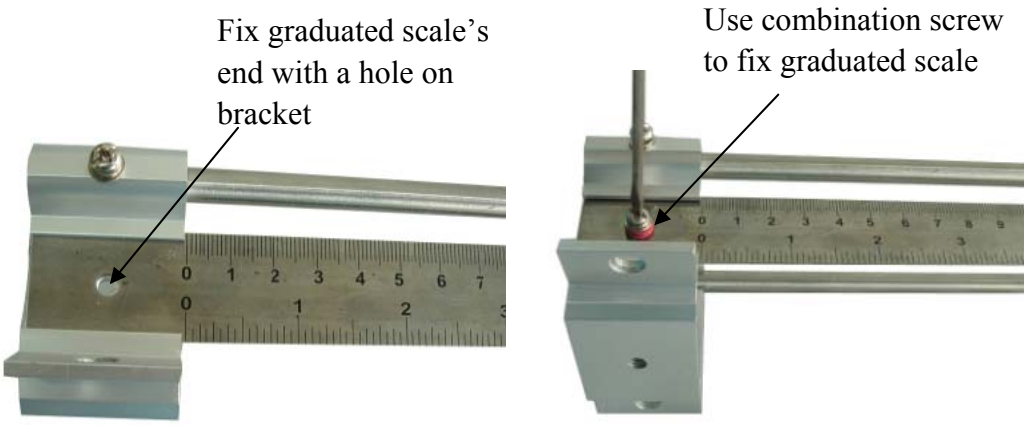


Note: When the transducer spacing is out the range of graduated scale, do not install graduated scale, and use measuring tape or other tool to locate the transducer spacing.

**C, Install metal chains.**

Suppose the side we install graduated scale as bracket upside.

On the bracket downside, use latch 1 to connect bracket and metal chain, shown as the following pictures.

On the metal chain end, use latch 2 to connect copper screw and metal chain.

**D, Fix the bracket on pipeline.**

According to the pipe size, adjust the latch 2's position on metal chain to make copper screw across the hole in the bracket, and ensure metal chain around pipeline and straight, shown as follow. Use nut to fix bracket and adjust firm degree of metal chain in pipeline.
Note: Please do not over tighten.

**E, Fix another bracket.**
Shown as the following pictures, place another bracket to guide rods, and slip graduated scale into bracket. According to the transducer spacing, adjust the bracket' position, and then use two combination screws to fix bracket on guide rods.
According to steps C and D, fix the bracket on pipeline.

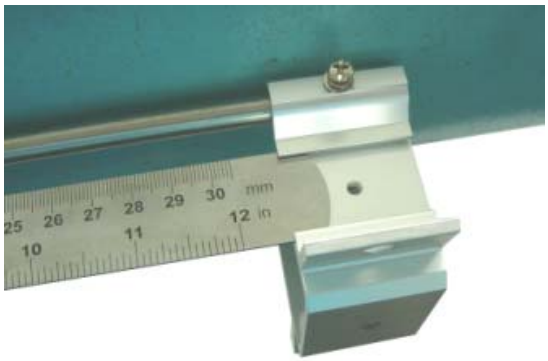

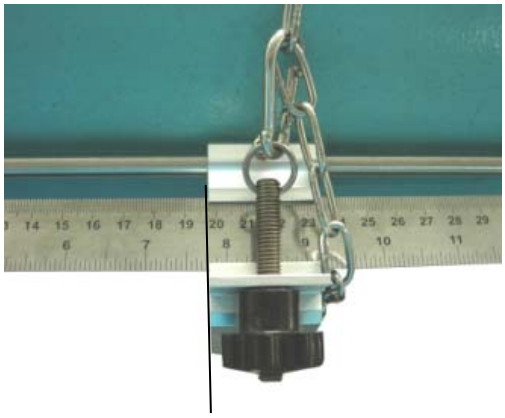

Scale benchmark

**F, Install transducer.**
When the mounting frame has been installed, it is shown as the following picture. Make sure that the reading of graduated scale should be the same as transducer spacing displayed in Menu 25 of flowmeter. (In practical application, in order to increase signal quality Q, and make ratio value in the range of 100±3%, maybe need to adjust transducer mounting spacing a little)

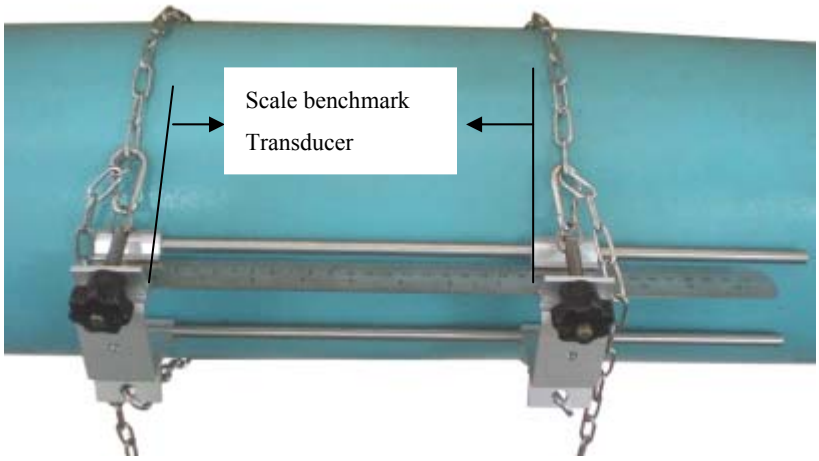


Equably spread couplant on measuring side of transducer, and then put transducer into bracket from broadside, make sure pipeline and transducer have good coupling.
Use screws to fix transducers. Refer to the following pictures.

**Notes:**
1. Keep transducer end face and bracket end face at the same plane.
2. When using screw to fix transducer, we can observe the installation from broadside.
3. Do not over tighten to prevent couplant extrusion.

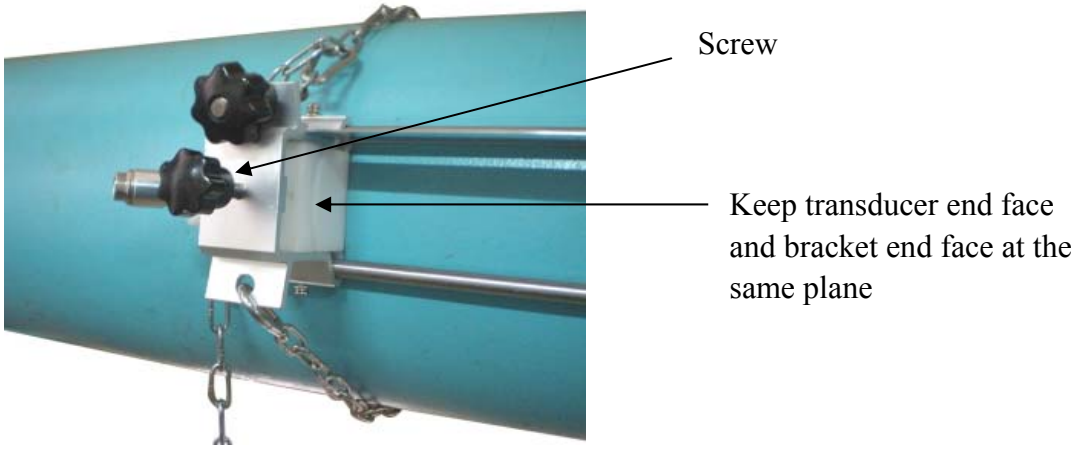


Mounting Frame Installation for Dedicated Flowmeter (Flat view)

Mounting Frame Installation for Portable/Handheld Flowmeter (Flat view)

### 3.2 Installation Steps for Z and N Transducer Mounting Method

When using Z or N method to install transducers, install the two transducers respectively on the opposite sides of pipeline. Installation steps are as follow.

**A, Install metal chain.**
Refer to step C in steps for V and W method. Due to install the two transducers on the opposite sides of pipeline, do not use guide rods and graduated scale.

**B, Fix bracket to pipeline.**
Refer to step D in steps for V and W method. Use latch and metal chain to fix bracket on pipeline, shown as the following picture.

**C, Install another bracket.**
According to step A and B, install another bracket.
According to the transducer spacing, adjust the bracket position.

**Notes:**
1. Ensure that the two brackets are on the same axial surface.
2. Use Z or N method to install transducers, do not use guide rods and graduated scale, so when we decide transducer spacing, we can make a sign on the same side at first, then make another sign on the other side of pipeline.

When finishing the installation, it will show as follow:

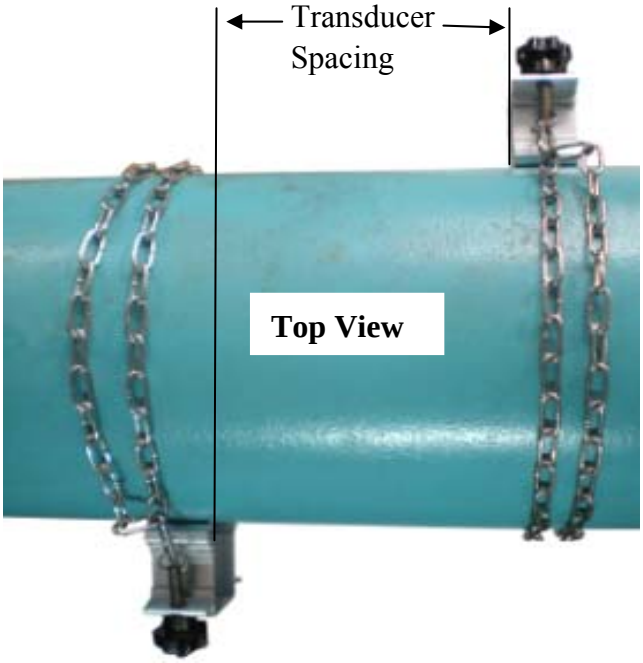


**D, Install the transducer.**
Equably spread couplant on measuring side of transducer, and then put transducer into bracket from broadside, make sure pipeline and transducer have good coupling.
Use screws to fix transducers. Refer to the following pictures.

**Notes:**
1. Keep transducer end face and bracket end face at the same plane.
2. When use screw to fix transducer, we can observe the installation from broadside.
3. Do not over tighten to prevent couplant extrusion.

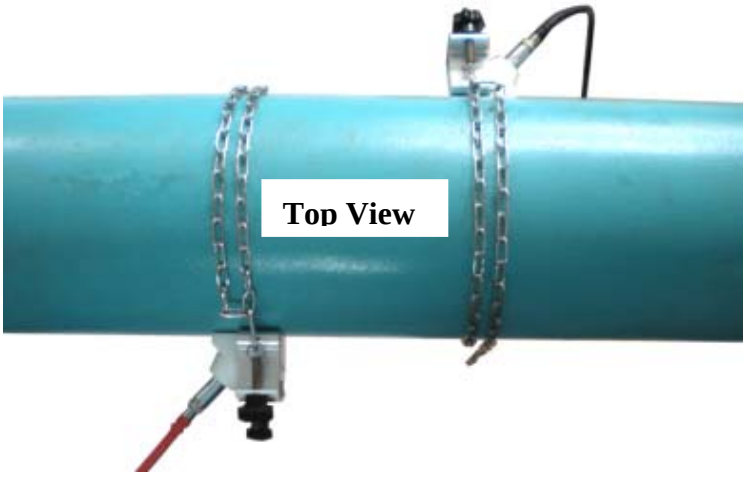

# APPENDIX 2 FLUID CHARACTERISTIC (SOUND SPEED) TABLE

## 1. FLUID PROPERTIES

| Fluid | Specific Gravity | Sound Speed | | delta-v/degree C | Kinematic Viscosity | Absolute viscosity |
|---|---|---|---|---|---|---|
| | 20 degrees C | m/s | ft/s | m/s/degree C | Centistokes | Centipoises |
| Acetate, Butyl | | 1270 | 4163.9 | | | |
| Acetate, Ethyl | 0.901 | 1085 | 3559.7 | 4.4 | 0.489 | 0.441 |
| Acetate, Methyl | 0.934 | 1211 | 3973.1 | | 0.407 | 0.380 |
| Acetate, Propyl | | 1280 | 4196.7 | | | |
| Acetone | 0.79 | 1174 | 3851.7 | 4.5 | 0.399 | 0.316 |
| Alcohol | 0.79 | 1207 | 3960.0 | 4.0 | 1.396 | 1.101 |
| Alcohol, Butyl | 0.83 | 1270 | 4163.9 | 3.3 | 3.239 | 2.688 |
| Alcohol, Ethyl | 0.83 | 1180 | 3868.9 | 4 | 1.396 | 1.159 |
| Alcohol, Methyl | 0.791 | 1120 | 3672.1 | 2.92 | 0.695 | 0.550 |
| Alcohol, Propyl | | 1170 | 3836.1 | | | |
| Alcohol, Propyl | 0.78 | 1222 | 4009.2 | | 2.549 | 1.988 |
| Ammonia | 0.77 | 1729 | 5672.6 | 6.7 | 0.292 | 0.225 |
| Aniline | 1.02 | 1639 | 5377.3 | 4.0 | 3.630 | 3.710 |
| Benzene | 0.88 | 1306 | 4284.8 | 4.7 | 0.711 | 0.625 |
| Benzol, Ethyl | 0.867 | 1338 | 4389.8 | | 0.797 | 0.691 |
| Bromine | 2.93 | 889 | 2916.7 | 3.0 | 0.323 | 0.946 |
| n-Butane | 0.60 | 1085 | 3559.7 | 5.8 | | |
| Butyrate, Ethyl | | 1170 | 3836.1 | | | |
| Carbon dioxide | 1.10 | 839 | 2752.6 | 7.7 | 0.137 | 0.151 |
| Carbon tetrachloride | 1.60 | 926 | 3038.1 | 2.5 | 0.607 | 0.968 |
| Chloro-benzene | 1.11 | 1273 | 4176.5 | 3.6 | 0.722 | 0.799 |
| Chloroform | 1.49 | 979 | 3211.9 | 3.4 | 0.550 | 0.819 |
| Diethyl ether | 0.71 | 985 | 3231.6 | 4.9 | 0.311 | 0.222 |
| Diethyl Ketone | | 1310 | 4295.1 | | | |
| Diethylene glycol | 1.12 | 1586 | 5203.4 | 2.4 | | |
| Ethanol | 0.79 | 1207 | 3960.0 | 4.0 | 1.390 | 1.097 |
| Ethyl alcohol | 0.79 | 1207 | 3960.0 | 4.0 | 1.396 | 1.101 |
| Ether | 0.71 | 985 | 3231.6 | 4.9 | 0.311 | 0.222 |
| Ethyl ether | 0.71 | 985 | 3231.6 | 4.9 | 0.311 | 0.222 |
| Ethylene glycol | 1.11 | 1658 | 5439.6 | 2.1 | 17.208 | 19.153 |
| Freon R12 | | 774.2 | 2540 | | | |
| Gasoline | 0.7 | 1250 | 4098.4 | | | |
| Glycerin | 1.26 | 1904 | 6246.7 | 2.2 | 757.100 | 953.946 |
| Glycol | 1.11 | 1658 | 5439.6 | 2.1 | | |
| Iso-Butanol | 0.81 | 1212 | 3976.4 | | | |
| Iso-Butane | | 1219.8 | 4002 | | | |
| Isopentane | 0.62 | 980 | 3215.2 | 4.8 | 0.340 | 0.211 |
| Isopropanol | 0.79 | 1170 | 3838.6 | | 2.718 | 2.134 |
| Isopropyl alcohol | 0.79 | 1170 | 3838.6 | | 2.718 | 2.134 |
| Kerosene | 0.81 | 1324 | 4343.8 | 3.6 | | |

| | | | | | |
|---|---|---|---|---|---|
| Linalool | | 1400 4590.2 | | | |
| Linseed Oil | .925-.939 | 1770 5803.3 | | | |
| Methanol | 0.79 | 1076 3530.2 | 2.92 | 0.695 | 0.550 |
| Methyl alcohol | 0.79 | 1076 3530.2 | 2.92 | 0.695 | 0.550 |
| Methylene chloride | 1.33 | 1070 3510.5 | 3.94 | 0.310 | 0.411 |
| Methylethyl Ketone | | 1210 3967.2 | | | |
| Motor Oil (SAE 20/30) | .88-.935 | 1487 4875.4 | | | |
| Octane | 0.70 | 1172 3845.1 | 4.14 | 0.730 | 0.513 |

| | | | | | | |
|---|---|---|---|---|---|---|
| Oil, Castor | 0.97 | 1477 | 4845.8 | 3.6 | 0.670 | 0.649 |
| Oil, Diesel | 0.80 | 1250 | 4101 | | | |
| Oil (Lubricating X200) | | 1530 | 5019.9 | | | |
| Oil (Olive) | 0.91 | 1431 | 4694.9 | 2.75 | 100.000 | 91.200 |
| Oil (Peanut) | 0.94 | 1458 | 4783.5 | | | |
| Paraffin Oil | | 1420 | 4655.7 | | | |
| Pentane | 0.626 | 1020 | 3346.5 | | 0.363 | 0.227 |
| Petroleum | 0.876 | 1290 | 4229.5 | | | |
| 1-Propanol | 0.78 | 1222 | 4009.2 | | | |
| Refrigerant 11 | 1.49 | 828.3 | 2717.5 | 3.56 | | |
| Refrigerant 12 | 1.52 | 774.1 | 2539.7 | 4.24 | | |
| Refrigerant 14 | 1.75 | 875.24 | 2871.5 | 6.61 | | |
| Refrigerant 21 | 1.43 | 891 | 2923.2 | 3.97 | | |
| Refrigerant 22 | 1.49 | 893.9 | 2932.7 | 4.79 | | |
| Refrigerant 113 | 1.56 | 783.7 | 2571.2 | 3.44 | | |
| Refrigerant 114 | 1.46 | 665.3 | 2182.7 | 3.73 | | |
| Refrigerant 115 | | 656.4 | 2153.5 | 4.42 | | |
| Refrigerant C318 | 1.62 | 574 | 1883.2 | 3.88 | | |
| Silicone (30 cp) | 0.99 | 990 | 3248 | | 30.000 | 29.790 |
| Toluene | 0.87 | 1328 | 4357 | 4.27 | 0.644 | 0.558 |
| Transformer Oil | | 1390 | 4557.4 | | | |
| Trichlorethylene | | 1050 | 3442.6 | | | |
| 1,1,1-Trichloro-ethane | 1.33 | 985 | 3231.6 | | 0.902 | 1.200 |
| Turpentine | 0.88 | 1255 | 4117.5 | | 1.400 | 1.232 |
| Water, distilled | 0.996 | 1498 | 4914.7 | -2.4 | 1.000 | 0.996 |
| Water, heavy | 1 | 1400 | 4593 | | | |
| Water, sea | 1.025 | 1531 | 5023 | -2.4 | 1.000 | 1.025 |
| Wood Alcohol | 0.791 | 1076 | 3530.2 | 2.92 | 0.695 | 0.550 |
| m-Xylene | 0.868 | 1343 | 4406.2 | | 0.749 | 0.650 |
| o-Xylene | 0.897 | 1331.5 | 4368.4 | 4.1 | 0.903 | 0.810 |
| p-Xylene | | 1334 | 4376.8 | | 0.662 | |

2. WATER SOUND SPEED

**Water Sound Speed table ( pressure: 1 bar）** Units: Sound Speed: m/s

| Temperature℃ | Sound Speed | Temperature ℃ | Sound Speed | Temperature ℃ | Sound Speed | Temperature ℃ | Sound Speed |
|---|---|---|---|---|---|---|---|
| 0 | 1402.3 | 25 | 1496.6 | 50 | 1542.5 | 75 | 1555.1 |
| 1 | 1407.3 | 26 | 1499.2 | 51 | 1543.5 | 76 | 1555.0 |
| 2 | 1412.2 | 27 | 1501.8 | 52 | 1544.6 | 77 | 1554.9 |
| 3 | 1416.9 | 28 | 1504.3 | 53 | 1545.5 | 78 | 1554.8 |
| 4 | 1421.6 | 29 | 1506.7 | 54 | 1546.4 | 79 | 1554.6 |
| 5 | 1426.1 | 30 | 1509.0 | 55 | 1547.3 | 80 | 1554.4 |
| 6 | 1430.5 | 31 | 1511.3 | 56 | 1548.1 | 81 | 1554.2 |
| 7 | 1434.8 | 32 | 1513.5 | 57 | 1548.9 | 82 | 1553.9 |
| 8 | 1439.1 | 33 | 1515.7 | 58 | 1549.6 | 83 | 1553.6 |
| 9 | 1443.2 | 34 | 1517.7 | 59 | 1550.3 | 84 | 1553.2 |
| 10 | 1447.2 | 35 | 1519.7 | 60 | 1550.9 | 85 | 1552.8 |
| 11 | 1451.1 | 36 | 1521.7 | 61 | 1551.5 | 86 | 1552.4 |
| 12 | 1454.9 | 37 | 1523.5 | 62 | 1552.0 | 87 | 1552.0 |
| 13 | 1458.7 | 38 | 1525.3 | 63 | 1552.5 | 88 | 1551.5 |
| 14 | 1462.3 | 39 | 1527.1 | 64 | 1553.0 | 89 | 1551.0 |
| 15 | 1465.8 | 40 | 1528.8 | 65 | 1553.4 | 90 | 1550.4 |
| 16 | 1469.3 | 41 | 1530.4 | 66 | 1553.7 | 91 | 1549.8 |
| 17 | 1472.7 | 42 | 1532.0 | 67 | 1554.0 | 92 | 1549.2 |
| 18 | 1476.0 | 43 | 1533.5 | 68 | 1554.3 | 93 | 1548.5 |
| 19 | 1479.1 | 44 | 1534.9 | 69 | 1554.5 | 94 | 1547.5 |
| 20 | 1482.3 | 45 | 1536.3 | 70 | 1554.7 | 95 | 1547 .1 |
| 21 | 1485.3 | 46 | 1537.7 | 71 | 1554.9 | 96 | 1546.3 |
| 22 | 1488.2 | 47 | 1538.9 | 72 | 1555.0 | 97 | 1545.6 |
| 23 | 1491.1 | 48 | 1540.2 | 73 | 1555.0 | 98 | 1544.7 |
| 24 | 1493.9 | 49 | 1541.3 | 74 | 1555.1 | 99 | 1543.9 |

3. PIPE MATERIAL SOUND SPEED TABLE

| Pipe Material Sound Speed Table | Sound Speed(m/s) |
|---|---|
| Steel | 3206 |
| ABS | 2286 |
| Aluminum | 3048 |
| Brass | 2270 |
| Cast Iron | 2460 |
| Bronze | 2270 |
| Fiber Glass | 3430 |
| Glass | 3276 |
| Polyethylene | 1950 |
| PVC | 2540 |

| Liner Material | Sound Speed (m/s) |
|---|---|
| Teflon | 1225 |
| Titanium | 3150 |
| Cement | 4190 |
| Tar Epoxy | 2540 |
| Porcelain Enamel | 2540 |
| Glass | 5970 |
| Plastic | 2280 |
| Polyethylene | 1600 |
| PTFE | 1450 |
| Rubber | 1600 |

# APPENDIX 3 DMHFP COMMUNICATIONS PROTOCOL

## 1.1 GENERAL

The DMHFP Heat Meter integrates a standard RS-232C communication interface.

## 1.2 INTERFACE PIN-OUT DEFINITION

| | | |
|---|---|---|
| Pin | 1 | not used |
| | 2 | RXD |
| | 3 | TXD |
| | 4 | not used |
| | 5 | GND |
| | 6 | not used |
| | 7 | not used |
| | 8 | not used |
| | 9 | not used |

## 1.3 THE PROTOCOL

The protocol is comprised of a set of basic commands that is a string in ASCII format, ending with a carriage (CR) and line feed (LF). Commonly used commands are listed in the following table.

| Command | Function | Data Format |
|---|---|---|
| DQD(CR) | Return flow rate per day | ±d.dddddE±dd(CR)（LF）* |
| DQH(CR) | Return flow rate per hour | ±d.dddddE±dd(CR)（LF） |
| DQM(CR) | Return flow rate per minute | ±d.dddddE±dd(CR)（LF） |
| DQS(CR) | Return flow rate per second | ±d.dddddE±dd(CR)（LF） |
| DV(CR) | Return flow velocity | ±d.dddddE±dd(CR)（LF） |
| DI+(CR) | Return POS totalizer | ±ddddddE±d(CR)（LF）** |
| DI-(CR) | Return NEG totalizer | ±ddddddE±d(CR)（LF） |
| DIN(CR) | Return NET totalizer | ±ddddddE±d(CR)（LF） |
| DID(CR) | Return Identification Number | ddddd(CR)（LF） |
| DL(CR) | Return signal strength and quality | S=ddd,ddd Q=dd (CR)(LF) |
| DT(CR) | Return date and time | yy-mm-dd hh:mm:ss(CR)(LF) |
| M@(CR)*** | Send a key value as if a key is pressed | |
| LCD(CR) | Return the current window display | |
| FOdddd(CR) | Force the FO output with a frequency in dddd Hz | |
| BA1(cr) | Return T1 value （0~20mA） | ±d.dddddE±dd(cr)(lf) |

| | | |
|---|---|---|
| BA2(cr) | Return T2 value （0~20mA) | ±d.dddddddE±dd(cr)(lf) |
| BA3(cr) | No used | ±d.dddddddE±dd(cr)(lf) |
| BA4(cr) | No used | ±d.dddddddE±dd(cr)(lf) |
| AI1(cr) | Return T1 input value | ±d.dddddddE±dd(cr)(lf) |
| AI2(cr) | Return T2 input value | ±d.dddddddE±dd(cr)(lf) |
| AI3(cr) | No used | ±d.dddddddE±dd(cr)(lf) |
| AI4(cr) | No used | ±d.dddddddE±dd(cr)(lf) |
| ESN(CR) | Return the ESN for the instrument | Ddddddd(CR)(LF) |
| RING(CR) | Handshaking Request by a MODEM | |
| OK(CR) | Response from a MODEM | No action |
| GA | Command for GSM messaging | Please contact factory for detail |
| GB | Command for GSM messaging | |
| GC | Command for GSM messaging | |
| DUMP(CR) | Return the buffer content | In ASCII string format |
| DUMP0(CR) | Clear the whole buffer | In ASCII string format |
| DUMP1(CR) | Return the whole buffer content | In ASCII string Format, 24KB in length |
| W | Prefix before an Identification Number in a network environment. The IDN is a word, ranging 0-65534. | |
| N | Prefix before an Identification Number in a network environment. The IDN is a single byte value, ranging 00-255. | |
| P | Prefix before any command | |
| & | Command connector to make a longer command by combining up to 6 commands | |

Notes * CR stands for Carriage Return and LF for Line Feed.

** ‘d’ stands for the 0~9 digit numbers.

*** @ stands for the key value, e.g., 30H for the ‘0’ key.

## 1.4 PROTOCOL PREFIX USAGE

(1) Prefix P

The prefix P can be added before any command in the above table to have the returning data followed with two bytes of CRC check sum, which is the adding sum of the original character string.

Take the DI+(CR) command as an example. Assume that DI+(CR) would return +1234567E+0m3(CR)(LF)( the string in hexadecimal is 2BH, 31H, 32H, 33H, 34H, 35H, 36H, 37H, 45H, 2BH, 30H, 6DH, 33H, 20H, 0DH, 0AH) , then PDI(CR) would return +1234567E+0m3!F7(CR)(LF). '!' acts as the starter of check sum which is yielded by adding up the string 2BH, 31H, 32H, 33H, 34H, 35H, 36H, 37H, 45H, 2BH, 30H, 6DH, 33H, 20H.

Please note that there will be SPACES (20H) before '!'.

(2) Prefix W

The prefix W should be used in the network environment. The usage format is W + digit string which stands for the IDN (Identification Number of the meter) + basic command.

The digit string should have a value between 0 and 65534 except 13(0DH), 10 (0AH), 42(2AH,*), 38(26H, &).

For example, if the IDN=254 instrument is addressed and returning the velocity of that instrument is requested, the command will be W254DV(CR).

(3) Prefix N

The prefix N is a single byte IDN network prefix, not recommended in a new design. It is reserved only for the purpose of the compatibility with the former versions

(4) Command Connector &

The & command connector can connect up to 6 basic commands to form a longer command so that it will make the programming much easier.

For example, assume that the measurement of an instrument with DID=254 are going to be returned, and (then) all the following 3 values--- (1) flow rate (2) velocity (3)POS totalizer---will be returned simultaneously. The combined command would be W254DQD&DV&DI+(CR), and the result would be:

+1.234567E+12m3/d(CR)

+3.1235926E+00m/s(CR)

+1234567E+0m3(CR)

## 1.5 CODES FOR THE KEYPAD

The codes for the keypad should be used when the instrument is connected with other terminals that operate the instrument by transmitting the 'M' command along with the keypad code. By this function, remote operation of this instrument can be realized, even via the Internet.

| Key | Hexadecimal Key code | Decimal Key code | ASCII Code | Key | Hexadecimal Key code | Decimal Key code | ASCII Code |
|---|---|---|---|---|---|---|---|
| 0 | 30H | 48 | 0 | 8 | 38H | 56 | 8 |
| 1 | 31H | 49 | 1 | 9 | 39H | 57 | 9 |
| 2 | 32H | 50 | 2 | . | 3AH | 58 | : |
| 3 | 33H | 51 | 3 | ◀ | 3BH,0BH | 59 | ; |
| 4 | 34H | 52 | 4 | MENU | 3CH,0CH | 60 | < |
| 5 | 35H | 53 | 5 | ENTER | 3DH,0DH | 61 | = |
| 6 | 36H | 54 | 6 | ∧/+ | 3EH | 62 | > |
| 7 | 37H | 55 | 7 | ∨/- | 3FH | 63 | ? |

# APPENDIX 4 MODBUS-RTU COMMUNICATIONS PROTOCOL

**When customers need RS485( Modbus-RTU protocol), please refer to the following steps:**

1. Connect output terminal “D+, D-” to RS485 “A, B”.
2. Enter Menu 50, select the output off.
3. Enter Menu 46, enter the meter address, and this address must be the same with modbus address. If users modify the meter address after power on meter, please restart meter.
4. Enter Menu 52, select RS232C.
5. Enter Menu 62, select RS232C 9600 None.
6. The corresponding Modbus address.

| Address | Length | Function | RS232 Command |
|---|---|---|---|
| (40001) | 0 | Return Flow rate per day | DQD |
| (40003) | 2 | Return Flow rate per hour | DQH |
| (40005) | 4 | Return Flow rate per minute | DQM |
| (40007) | 6 | Return Flow rate per second | DQS |
| (40009) | 8 | Return Flow velocity | DV |
| (40011) | 10 | Return Positive totalizer | DI+ |
| (40013) | 12 | Return Negative totalizer | DI- |
| (40015) | 14 | Return Net totalizer | DIN |
| (40017) | 16 | Return Positive Heat totalizer | DIE |
| (40019) | 18 | Return heat flow rate per second | E |
| (40021) | 20 | Return percentage of Analog Output | DS |
| (40023) | 30 | Return T1 value （0~20mA） | BA1 |
| (40025) | 32 | Return T2 value（0~20mA) | BA2 |
| (40027) | 34 | No used | BA3 |
| (40029) | 36 | No used | BA4 |
| (40031) | 38 | Return T1 input value | AI1 |
| (40033) | 40 | Return T2 input value | AI2 |
| (40035) | 42 | No used | AI3 |
| (40037) | 44 | No used | AI4 |
| (40039) | 48 | Return meter address | DID |
| (40041) | 50 | Return DMHF Electronic Serial Number (ESN) | ESN |

**Note: The data format of DI+, DI-, DIN, DIE, DID and ESN is long integer data format, high bit is before low bit, the highest bit is symbol bit. The other’s data format is IEE754 floating-point data format, high bit is before low bit.**

DYNAMETERS™

**Dynameters Shanghai Co., Ltd.**

**No 751 Shulin Road, Eastern New Area,**
**Songjiang Industrial Zone,**
**Shanghai 201611 China**
**Phone: (+86) 21 6760 2289**
**Fax: (+86) 21 6760 2287**
**E-mail: info@dynameters.com**
**Web: www.dynameters.com**